ΕΛΛΗΝΙΚΗ ΔΗΜΟΚΡΑΤΙΑ
ΙΟΝΙΟ ΠΑΝΕΠΙΣΤΗΜΙΟ

ΔΙΕΥΘΥΝΣΗ ΤΕΧΝΙΚΩΝ ΥΠΗΡΕΣΙΩΝ

ΕΡΓΟ :

ΚΤΙΡΙΟ ΤΜΗΜΑΤΟΣ ΜΟΥΣΙΚΩΝ ΣΠΟΥΔΩΝ ΣΤΟ ΟΙΚΟΠΕΔΟ Ε.Α.Σ.Κ.

ΘΕΣΗ ΕΡΓΟΥ :

9η ΠΑΡΟΔΟΣ Δ. ΘΕΟΤΟΚΗ ,
ΠΕΡΙΟΧΗ ΠΑΛΛΑΔΑ - Ο.Τ. 379 , ΚΕΡΚΥΡΑ

ΣΤΑΔΙΟ ΜΕΛΕΤΗΣ :	**ΣΤΑΤΙΚΗ ΜΕΛΕΤΗ ΕΦΑΡΜΟΓΗΣ**	ΣΤΑ.
ΘΕΜΑ ΤΕΥΧΟΥΣ :	ΤΕΥΧΟΣ ΣΤΑΤΙΚΩΝ ΥΠΟΛΟΓΙΣΜΩΝ ΜΕΤΑΛΛΙΚΗΣ ΚΑΤΑΣΚΕΥΗΣ ΑΜΦΙΘΕΑΤΡΟΥ 13.2 ΚΤΙΡΙΟ Γ	Τ.08

ΑΡΧΙΤΕΚΤΟΝΙΚΗ ΜΕΛΕΤΗ	ΣΤΑΤΙΚΗ ΜΕΛΕΤΗ	ΜΕΛΕΤΗ Η/Μ ΕΓΚΑΤΑΣΤΑΣΕΩΝ	ΗΜΕΡΟΜΗΝΙΑ
Δ. ΒΑΣΙΛΟΠΟΥΛΟΣ & ΣΥΝΕΡΓΑΤΕΣ Ε.Ε. ΣΥΝΕΡΓΑΤΕΣ ΑΡΧΙΤΕΚΤΟΝΕΣ : Σ.ΚΟΛΟΒΟΥ, Ε. ΝΤΟΥΡΜΑ, Χ. ΣΟΥΛΙΩΤΗ, Φ. ΓΕΡΟΝΤΑΚΗΣ.	ΑΡΤΕΜΙΣ ΣΥΜΒΟΥΛΟΙ ΜΗΧΑΝΙΚΟΙ Ε.Π.Ε.	Η-Μ ΣΧΕΔΙΑΣΜΟΣ Κ. ΓΕΩΡΓΑΚΟΠΟΥΛΟΣ- Σ. ΤΣΑΝΤΕΣ & ΣΙΑ Ε.Ε.	ΣΕΠΤΕΜΒΡΙΟΣ 2019
ΣΥΜΒΟΥΛΟΣ ΑΚΟΥΣΤΙΚΗΣ ΜΕΛΕΤΗΣ: Ι. ΜΑΡΙΝΟΣ	ΓΕΩΤΕΧΝΙΚΗ ΜΕΛΕΤΗ: Ν. ΔΕΡΕΚΑΣ		

ΣΦΡΑΓΙΔΕΣ - ΥΠΟΓΡΑΦΕΣ

ΑΡΤΕΜΙΣ ΣΥΜΒΟΥΛΟΙ ΜΗΧΑΝΙΚΟΙ ΕΠΕ
ΕΤΑΙΡΕΙΑ ΣΤΑΤΙΚΩΝ ΜΕΛΕΤΩΝ
ΛΟΥΚΑΡΕΩΣ 57-59 114 75 ΑΘΗΝΑ
ΤΗΛ.: 210 6450349, ΦΑΞ: 210 6450745
ΑΦΜ: 099841348, ΔΟΥ: ΙΣΤ' ΑΘΗΝΩΝ

	Ποιότητα Υλικών	
1	Σκυρόδεμα φ.ο. κτιρίων	C25/30
3	Σκυρόδεμα φ.ο. φρεατοπασσάλων	C25/30
4	Εκτοξευόμενο σκυρόδεμα επί φρεατοπασσάλων	C25/30
5	Σκυρόδεμα καθαριότητας θεμελίων	C12/15
6	Σκυρόδεμα ελαφρά ωπλισμένων δαπέδων	C20/25
7	Χάλυβας κυρίως οπλισμού	B500C
8	Χάλυβας συνδετήρων	B500C
9	Χάλυβας δομικών πλεγμάτων	B500A
10	Δομικός χάλυβας μεταλλικών κατασκευών	S235, S275
11	Ποιότητα κοχλιών	8.8
12	Φυσική ξυλεία δαπέδων	C24

	Σεισμολογικά στοιχεία		
1	Οριζόντια σεισμική επιτάχυνση	A_h=	0,24g
2	Κατακόρυφη σεισμική επιτάχυνση	A_v=	0,7*0,24g=0,168g
3	Σπουδαιότητα κτιρίου		Σ3
4	Συντελεστής Σπουδαιότητας	γ=	1,15
5	Συντελεστής θεμελίωσης	θ=	1
6	Συντελεστής συμπεριφοράς οριζόντιας σεισμικής δράσης	q_h=	3,5
7	Συντελεστής συμπεριφοράς κατακόρυφης σεισμικής δράσης	q_v=	0,5q=1,75
8	Συντελεστής Φασματικής Ενίσχυσης	β_0=	2,5
9	Κατηγορία Εδάφους		Γ
10	Χαρακτηριστικές περίοδοι εδάφους	T1=0,20sec	T2=0,80sec
11	Συντελεστής κρίσιμης απόσβεσης για ρηγματωμένο σκυρόδεμα	ζ=	5%
17	Συντελεστής συνδυασμού δράσεων ανάλογα με τα φορτία χρήσης (πιν. 4.1 ΕΑΚ2000, 1.2)	ψ_2=	0,50

	Μόνιμα Φορτία		
1	Ειδικό βάρος ωπλισμένου σκυροδέματος	25,00	kN/m^3
2	Ειδικό βάρος χάλυβα οπλισμού	78,90	kN/m^3
3	Δρομικές οπτοπλινθοδομές	2,10	kN/m^2
4	Μπατικές Οπτοπλινθοδομές	3,60	kN/m^2
5	Συμπαγείς Οπτοπλινθοδομές (πάχος 20cm)	3,80	kN/m^2
6	Συμπαγείς Οπτοπλινθοδομές (πάχος 30cm)	5,80	kN/m^2
5	Ελαφρά Χωρίσματα πάχους 10cm	0,45	kN/m^2
6	Επιστρώσεις δαπέδων εσωτερικών χώρων	2,00	kN/m^2
7	Επιστρώσεις κλιμάκων, πλατύσκαλων, εξωστών	3,50	kN/m^2
8	Επικάλυψη δωμάτων	3,50	kN/m^2
9	Επικάλυψη στεγάστρων, στεγών	0,25	kN/m^2
10	Επικάλυψη αιθρίου με γυαλί	1.00	kN/m^2
11	Ειδικό βάρος χώματος φύτευσης	20,00	kN/m^3
12	Ειδικό βάρος γεμίσματος δαπέδων εσωτερικών χώρων	10,00	kN/m^3
13	Ειδικό βάρος ύδατος (δεξαμενή πυρόσβεσης)	10,00	kN/m^3

	Μεταβλητά Φορτία		
1	Ωφέλιμο φορτίο γραφείων	3,50	kN/m^2
2	Ωφέλιμο φορτίο αιθουσών διδασκαλίας	3,50-5,00	kN/m^2
3	Ωφέλιμο φορτίο αιθουσών εκδηλώσεων/ αμφιθεάτρων	7,50	kN/m^2
4	Ωφέλιμο φορτίο δαπέδων εξωστών	5,00	kN/m^2
5	Ωφέλιμο φορτίο κλιμάκων, πλατύσκαλων, χώρων κυκλοφορίας	5,00	kN/m^2
6	Ωφέλιμο φορτίο θέσεων στάθμευσης και κυκλοφορίας οχήματων στο δάπεδο υπογείου	5,00	kN/m^2
7	Ωφέλιμο φορτίο μη βατών δωμάτων	2,00	kN/m^2
8	Ωφέλιμο φορτίο βατών δωμάτων	5,00	kN/m^2
9	Ωφέλιμο φορτίο Η/Μ εγκαταστάσεων στο δώμα	2,00	kN/m^2
10	Ωφέλιμο φορτίο Η/Μ εγκαταστάσεων στο υπόγειο	10,00	kN/m^2
11	Ωφέλιμο φορτίο αποθηκευτικών χώρων υπογείου	10,00	kN/m^2
12	Ανεμοπίεση στους υποφορείς από δομικό χάλυβα	u=	33m/sec
13	Φορτίο Χιονιού	0,60	kN/m^2

	Εδαφολογικά στοιχεία		
1	Κατηγορία Εδάφους (από Γεωτεχνική Έρευνα-Μελέτη, Αύγουστος 2007)	Γ	
2	Περίοδοι φάσματος (κατά ΕΑΚ 2000)	Τ1=0,20sec	Τ2 =0,80sec
3	Συντελεστής θεμελίωσης (κατά ΕΑΚ 2000)	θ=	1
	Επιτρεπόμενη τάση (βάσει Γεωτεχνικής, Αυγούστου 2007)	σεπ=	100 kPa
4	Επιτρεπόμενη τάση που λήφθηκε υπόψη στους υπολογισμούς (προσαύξηση λόγω εμβάθυνσης θεμελίωσης)	σεπ=	190 kPa
5	Δείκτης εδάφους (από Γεωτεχνική Έρευνα-Μελέτη, Αύγουστος 2007)	K_v=	33.000 kN/m^3
6	Φαινόμενο βάρος γαιών	γ=	20-24 KN/m^3

	Συντελεστές ασφάλειας υλικών	
1	Σκυρόδεμα	1,50
2	Χάλυβας οπλισμού	1,15
3	Δομικού χάλυβα	1,10
4	Συγκολλήσεων, κοχλιώσεων	1,25

	Επικαλύψεις κύριων οπλισμών φερόντων δομικών στοιχείων • *Παρ.5.1 ΕΚΩΣ2000, Παραθαλάσσιο Περιβάλλον* • *Κανονισμός πυροπροστασίας για πυραντίσταση 60 λεπτών στους υπέργειους ορόφους και 90 λεπτών στο υπόγειο (εκπαιδευτήρια)*	
1	Συμπαγείς πλάκες	4,5cm
3	Δοκοί υπογείου	4,5cm
4	Δοκοί λοιπών σταθμών	4,5cm
5	Υποστυλώματα	4,5cm
6	Θεμελίωση	5,0cm

Περιεχόμενα

1 ΤΕΧΝΙΚΗ ΠΕΡΙΓΡΑΦΗ....3
2 ΘΕΜΑΤΑ ΠΡΟΣΟΜΟΙΩΣΗΣ, ΑΝΑΛΥΣΗΣ & ΔΙΑΣΤΑΣΙΟΛΟΓΗΣΗΣ....5
3 ΠΑΡΑΔΟΧΕΣ ΜΕΛΕΤΗΣ....5
3.1 ΥΛΙΚΑ....5
3.2 ΦΟΡΤΙΣΕΙΣ....5
3.3 ΚΑΝΟΝΙΣΜΟΙ....5
4 ΚΥΡΙΟΣ ΦΟΡΕΑΣ – ΑΜΦΙΘΕΑΤΡΟ Α.4.13.2....6
4.1 ΔΕΔΟΜΕΝΑ ΠΡΟΣΟΜΟΙΩΜΑΤΟΣ....6
4.2 ΦΟΡΤΙΣΕΙΣ....13
4.3 ΑΠΟΤΕΛΕΣΜΑΤΑ....19
5 ΚΥΡΙΟΣ ΦΟΡΕΑΣ – ΧΩΡΟΣ ΑΝΑΜΟΝΗΣ....59
5.1 ΔΕΔΟΜΕΝΑ ΠΡΟΣΟΜΟΙΩΜΑΤΟΣ....59
5.2 ΦΟΡΤΙΣΕΙΣ....63
5.3 ΑΠΟΤΕΛΕΣΜΑΤΑ....68

1 ΤΕΧΝΙΚΗ ΠΕΡΙΓΡΑΦΗ

Η παρούσα Τεχνική Έκθεση και τα σχέδια που τη συνοδεύουν, αποτελούν στοιχεία της στατικής μελέτης, στα πλαίσια του έργου «**Κτίριο του Τμήματος Μουσικών Σπουδών στο Οικόπεδο Ε.Α.Σ.Κ.**» στο Ιόνιο Πανεπιστήμιο. Η μελέτη περιλαμβάνει την διαμόρφωση του αμφιθεάτρου Α.4.13.2, το οποίο στηρίζεται σε μεταλλικά στοιχεία που καταλήγουν και εδράζονται σε υφιστάμενα στοιχεία ωπλισμένου σκυροδέματος.

Το αμφιθέατρο Α.4.13.2 έχει διαστάσεις σε κάτοψη περί τα 3.9m x 7.35m, και σχηματίζει τις στάθμες -1.08, -0.76, -0.44 και -0.12. Στην είσοδο του αμφιθεάτρου διαμορφώνεται μεταλλικό πάτωμα πρόσβασης στην στάθμη -0.10 διαστάσεως κάτοψης περί τα 7.70m x 2.85m το οποίο εδράζεται περιμετρικά επί ανεστραμμένων δοκών ωπλισμένου σκυροδέματος.

Τριδιάστατη απεικόνιση μεταλλικού φορέα – Αμφιθέατρο Α.4.13.2

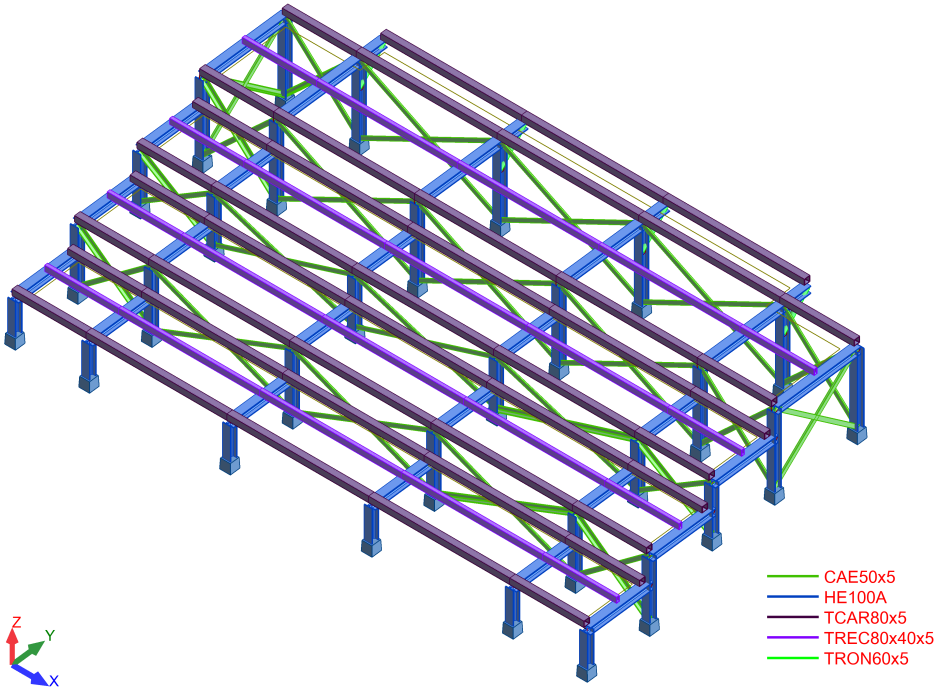

Τριδιάστατη απεικόνιση μεταλλικού φορέα – Χώρος αναμονής (είσοδος αμφιθεάτρου)

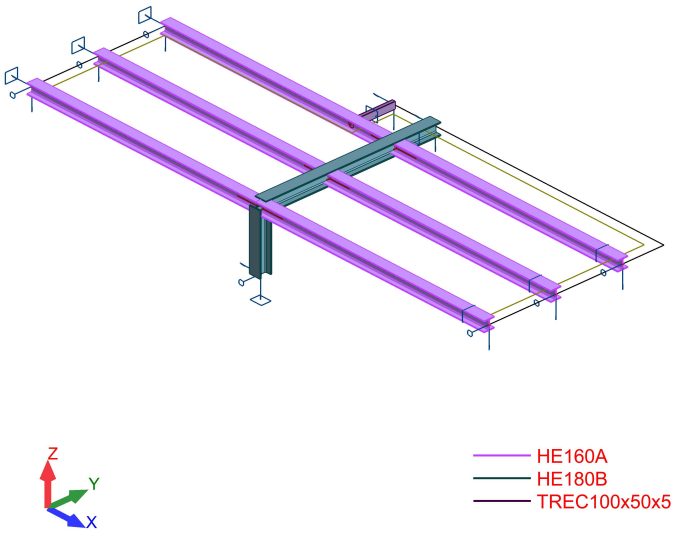

2 ΘΕΜΑΤΑ ΠΡΟΣΟΜΟΙΩΣΗΣ, ΑΝΑΛΥΣΗΣ & ΔΙΑΣΤΑΣΙΟΛΟΓΗΣΗΣ

Η μελέτη του φορέα έγινε με το Autodesk Robot Structural Analysis 2019. Το Autodesk Robot Structural Analysis Professional είναι ένα γενικό πρόγραμμα ανάλυσης και διαστασιολόγησης οποιασδήποτε κατασκευής (κτίρια, γέφυρες, ειδικές κατασκευές) από οπλισμένο σκυρόδεμα, χάλυβα, αλουμίνιο, ξύλο κλπ.

3 ΠΑΡΑΔΟΧΕΣ ΜΕΛΕΤΗΣ

3.1 ΥΛΙΚΑ

Για την μεταλλική κατασκευή θα γίνει χρήση χάλυβα ποιότητας S275 γενικά. Όλες οι κοίλες διατομές κατασκευάζονται από χάλυβα ποιότητας S235 Οι κοχλίες είναι κατηγορίας 8.8 γενικά, εκτός αν αναγράφεται διαφορετικά.

3.2 ΦΟΡΤΙΣΕΙΣ

Οι φορτίσεις που έχουν ληφθεί υπόψη για την επίλυση του φορέα έχουν ως εξής:

Μόνιμα Φορτία:

- Ίδιο Βάρος Χάλυβα: 78.50 kN/m^3
- Επίστρωση δαπέδων: 2.50 kN/m^2
- Κινητό φορτίο δαπέδων: 5.00 kN/m^2

3.3 ΚΑΝΟΝΙΣΜΟΙ

Οι κανονισμοί, βάση των οποίων μελετάται συνολικά το έργο, είναι οι ακόλουθοι.

- ΕΝ 1993: Σχεδιασμός κατασκευών από χάλυβα
- ΕΝ 1991: Δράσεις σε κτίρια
- ΕΝ 1992: Σχεδιασμός φορέων από σκυρόδεμα
- Ελληνικός αντισεισμικός κανονισμός (Ε.Α.Κ./2003)

4 ΚΥΡΙΟΣ ΦΟΡΕΑΣ – ΑΜΦΙΘΕΑΤΡΟ Α.4.13.2

4.1 ΔΕΔΟΜΕΝΑ ΠΡΟΣΟΜΟΙΩΜΑΤΟΣ

Αρίθμηση μελών προσομοιώματος

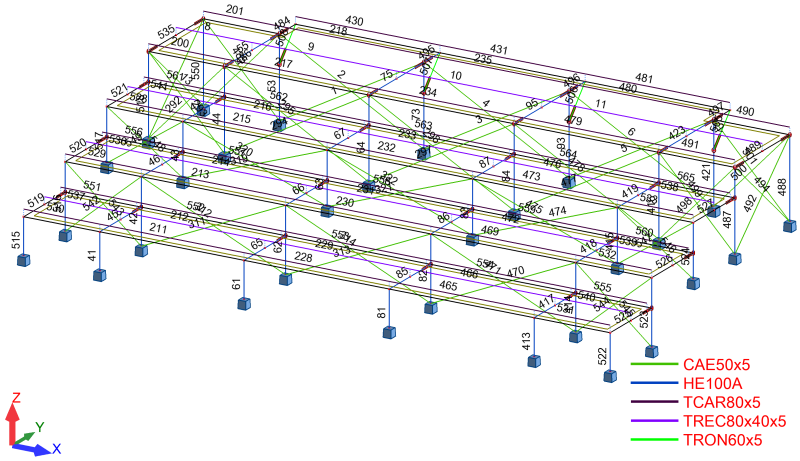

Αρίθμηση κόμβων προσομοιώματος

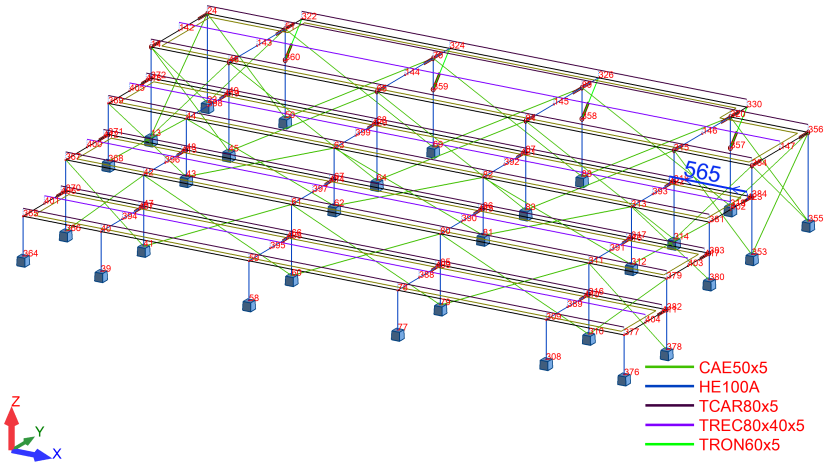

Data – Bars

Bar	Node 1	Node 2	Section	Material	Length (m)	Gamma (Deg)	Type
1	50	70	CAE50x5	S 275	2.06	0.0	_BRA
2	51	69	CAE50x5	S 275	2.06	0.0	_BRA
3	69	89	CAE50x5	S 275	2.07	0.0	_BRA
4	70	88	CAE50x5	S 275	2.07	0.0	_BRA
5	88	320	CAE50x5	S 275	2.07	0.0	_BRA
6	89	319	CAE50x5	S 275	2.07	0.0	_BRA
7	13	24	CAE50x5	S 275	1.55	0.0	_BRA
8	142	143	TREC80x40x5	S235	0.95	0.0	_BEAM
9	143	144	TREC80x40x5	S235	1.81	0.0	_BEAM
10	144	145	TREC80x40x5	S235	1.81	0.0	_BEAM
11	145	146	TREC80x40x5	S235	1.81	0.0	_BEAM
12	146	147	TREC80x40x5	S235	0.95	0.0	_BEAM
13	23	14	CAE50x5	S 275	1.55	0.0	_BRA
41	39	40	HE100A	S275	0.45	90.0	_CL
42	41	42	HE100A	S275	0.80	90.0	_CL
43	43	44	HE100A	S275	0.65	90.0	_CL
44	45	46	HE100A	S275	1.00	90.0	_CL
45	40	47	HE100A	S275	0.90	0.0	_BEAM
46	42	48	HE100A	S275	0.90	0.0	_BEAM
47	44	49	HE100A	S275	0.90	0.0	_BEAM
53	50	51	HE100A	S275	1.00	90.0	_CL
55	46	51	HE100A	S275	1.19	0.0	_BEAM
61	58	59	HE100A	S275	0.45	90.0	_CL
62	60	61	HE100A	S275	0.80	90.0	_CL
63	62	63	HE100A	S275	0.65	90.0	_CL
64	64	65	HE100A	S275	1.00	90.0	_CL
65	59	66	HE100A	S275	0.90	0.0	_BEAM
66	61	67	HE100A	S275	0.90	0.0	_BEAM
67	63	68	HE100A	S275	0.90	0.0	_BEAM
73	69	70	HE100A	S275	1.00	90.0	_CL
75	65	70	HE100A	S275	1.19	0.0	_BEAM
81	77	78	HE100A	S275	0.45	90.0	_CL
82	79	80	HE100A	S275	0.80	90.0	_CL
83	81	82	HE100A	S275	0.65	90.0	_CL
84	83	84	HE100A	S275	1.00	90.0	_CL
85	78	85	HE100A	S275	0.90	0.0	_BEAM
86	80	86	HE100A	S275	0.90	0.0	_BEAM
87	82	87	HE100A	S275	0.90	0.0	_BEAM
93	88	89	HE100A	S275	1.00	90.0	_CL
95	84	89	HE100A	S275	1.19	0.0	_BEAM
200	14	46	TCAR80x5	S235	0.95	0.0	_BEAM
201	24	51	TCAR80x5	S235	0.95	0.0	_BEAM
211	40	59	TCAR80x5	S235	1.80	0.0	_BEAM
212	394	395	TREC80x40x5	S235	1.81	0.0	_BEAM
213	42	61	TCAR80x5	S235	1.80	0.0	_BEAM
214	396	397	TREC80x40x5	S235	1.81	0.0	_BEAM
215	44	63	TCAR80x5	S235	1.80	0.0	_BEAM
216	398	399	TREC80x40x5	S235	1.81	0.0	_BEAM
217	46	65	TCAR80x5	S235	1.80	0.0	_BEAM
218	51	70	TCAR80x5	S235	1.81	0.0	_BEAM
228	59	78	TCAR80x5	S235	1.81	0.0	_BEAM
229	395	388	TREC80x40x5	S235	1.81	0.0	_BEAM
230	61	80	TCAR80x5	S235	1.81	0.0	_BEAM

Bar	Node 1	Node 2	Section	Material	Length (m)	Gamma (Deg)	Type
231	397	390	TREC80x40x5	S235	1.81	0.0	_BEAM
232	63	82	TCAR80x5	S235	1.81	0.0	_BEAM
233	399	392	TREC80x40x5	S235	1.81	0.0	_BEAM
234	65	84	TCAR80x5	S235	1.81	0.0	_BEAM
235	70	89	TCAR80x5	S235	1.81	0.0	_BEAM
292	13	46	CAE50x5	S 275	1.38	0.0	_BRA
293	45	14	CAE50x5	S 275	1.38	0.0	_BRA
294	45	65	CAE50x5	S 275	2.06	0.0	_BRA
295	46	64	CAE50x5	S 275	2.06	0.0	_BRA
297	64	84	CAE50x5	S 275	2.07	0.0	_BRA
298	65	83	CAE50x5	S 275	2.07	0.0	_BRA
311	41	61	CAE50x5	S 275	1.97	0.0	_BRA
312	42	60	CAE50x5	S 275	1.97	0.0	_BRA
313	60	80	CAE50x5	S 275	1.98	0.0	_BRA
314	61	79	CAE50x5	S 275	1.98	0.0	_BRA
319	43	63	CAE50x5	S 275	1.92	0.0	_BRA
320	44	62	CAE50x5	S 275	1.92	0.0	_BRA
321	62	82	CAE50x5	S 275	1.93	0.0	_BRA
322	63	81	CAE50x5	S 275	1.93	0.0	_BRA
413	308	309	HE100A	S275	0.45	90.0	_CL
414	310	311	HE100A	S275	0.80	90.0	_CL
415	312	313	HE100A	S275	0.65	90.0	_CL
416	314	315	HE100A	S275	1.00	90.0	_CL
417	309	316	HE100A	S275	0.90	0.0	_BEAM
418	311	317	HE100A	S275	0.90	0.0	_BEAM
419	313	318	HE100A	S275	0.90	0.0	_BEAM
421	319	320	HE100A	S275	1.00	90.0	_CL
423	315	320	HE100A	S275	1.19	0.0	_BEAM
430	322	324	TCAR80x5	S235	1.81	0.0	_BEAM
431	324	326	TCAR80x5	S235	1.81	0.0	_BEAM
465	78	309	TCAR80x5	S235	1.81	0.0	_BEAM
466	388	389	TREC80x40x5	S235	1.81	0.0	_BEAM
469	80	311	TCAR80x5	S235	1.81	0.0	_BEAM
470	311	79	CAE50x5	S 275	1.98	0.0	_BRA
471	80	310	CAE50x5	S 275	1.98	0.0	_BRA
472	390	391	TREC80x40x5	S235	1.81	0.0	_BEAM
473	82	313	TCAR80x5	S235	1.81	0.0	_BEAM
474	313	81	CAE50x5	S 275	1.92	0.0	_BRA
475	82	312	CAE50x5	S 275	1.92	0.0	_BRA
476	392	393	TREC80x40x5	S235	1.81	0.0	_BEAM
477	83	315	CAE50x5	S 275	2.07	0.0	_BRA
478	84	314	CAE50x5	S 275	2.07	0.0	_BRA
479	84	315	TCAR80x5	S235	1.81	0.0	_BEAM
480	89	320	TCAR80x5	S235	1.81	0.0	_BEAM
481	326	330	TCAR80x5	S235	1.81	0.0	_BEAM
484	51	322	HE100A	S275	0.35	0.0	_BEAM
485	24	50	CAE50x5	S 275	1.38	0.0	_BRA
486	51	23	CAE50x5	S 275	1.38	0.0	_BRA
487	353	354	HE100A	S275	1.00	90.0	_CL
488	355	356	HE100A	S275	1.00	90.0	_CL
489	354	356	HE100A	S275	1.19	0.0	_BEAM
490	320	356	TCAR80x5	S235	0.95	0.0	_BEAM
491	315	354	TCAR80x5	S235	0.95	0.0	_BEAM
492	353	356	CAE50x5	S 275	1.55	0.0	_BRA
494	354	355	CAE50x5	S 275	1.55	0.0	_BRA
495	70	324	HE100A	S275	0.35	0.0	_BEAM

Bar	Node 1	Node 2	Section	Material	Length (m)	Gamma (Deg)	Type
496	89	326	HE100A	S275	0.35	0.0	_BEAM
497	320	330	HE100A	S275	0.35	0.0	_BEAM
498	314	354	CAE50x5	S 275	1.38	0.0	_BRA
499	315	353	CAE50x5	S 275	1.38	0.0	_BRA
500	319	356	CAE50x5	S 275	1.38	0.0	_BRA
501	320	355	CAE50x5	S 275	1.38	0.0	_BRA
505	330	357	TRON60x5	S235	0.49	0.0	_BRA
506	326	358	TRON60x5	S235	0.49	0.0	_BRA
507	324	359	TRON60x5	S235	0.49	0.0	_BRA
508	322	360	TRON60x5	S235	0.49	0.0	_BRA
515	364	365	HE100A	S275	0.45	90.0	_CL
516	366	367	HE100A	S275	0.80	90.0	_CL
517	368	369	HE100A	S275	0.65	90.0	_CL
518	13	14	HE100A	S275	1.00	90.0	_CL
519	365	370	HE100A	S275	0.90	0.0	_BEAM
520	367	371	HE100A	S275	0.90	0.0	_BEAM
521	369	372	HE100A	S275	0.90	0.0	_BEAM
522	376	377	HE100A	S275	0.45	90.0	_CL
523	378	379	HE100A	S275	0.80	90.0	_CL
524	380	381	HE100A	S275	0.65	90.0	_CL
525	377	382	HE100A	S275	0.90	0.0	_BEAM
526	379	383	HE100A	S275	0.90	0.0	_BEAM
527	381	384	HE100A	S275	0.90	0.0	_BEAM
528	369	44	TCAR80x5	S235	0.95	0.0	_BEAM
529	367	42	TCAR80x5	S235	0.95	0.0	_BEAM
530	365	40	TCAR80x5	S235	0.95	0.0	_BEAM
531	309	377	TCAR80x5	S235	0.95	0.0	_BEAM
532	311	379	TCAR80x5	S235	0.95	0.0	_BEAM
533	313	381	TCAR80x5	S235	0.95	0.0	_BEAM
535	14	24	HE100A	S275	1.19	0.0	_BEAM
536	400	396	TREC80x40x5	S235	0.95	0.0	_BEAM
537	401	394	TREC80x40x5	S235	0.95	0.0	_BEAM
538	393	402	TREC80x40x5	S235	0.95	0.0	_BEAM
539	391	403	TREC80x40x5	S235	0.95	0.0	_BEAM
540	389	404	TREC80x40x5	S235	0.95	0.0	_BEAM
541	405	398	TREC80x40x5	S235	0.95	0.0	_BEAM
542	366	42	CAE50x5	S 275	1.24	0.0	_BRA
543	41	367	CAE50x5	S 275	1.24	0.0	_BRA
544	310	379	CAE50x5	S 275	1.24	0.0	_BRA
545	378	311	CAE50x5	S 275	1.24	0.0	_BRA
546	380	313	CAE50x5	S 275	1.15	0.0	_BRA
547	312	381	CAE50x5	S 275	1.15	0.0	_BRA
548	43	369	CAE50x5	S 275	1.15	0.0	_BRA
549	368	44	CAE50x5	S 275	1.15	0.0	_BRA
550	23	24	HE100A	S275	1.00	90.0	_CL
551	406	407	TCAR80x5	S235	0.95	0.0	_BEAM
552	407	408	TCAR80x5	S235	1.81	0.0	_BEAM
553	408	409	TCAR80x5	S235	1.81	0.0	_BEAM
554	409	410	TCAR80x5	S235	1.81	0.0	_BEAM
555	410	411	TCAR80x5	S235	0.95	0.0	_BEAM
556	412	413	TCAR80x5	S235	0.95	0.0	_BEAM
557	413	414	TCAR80x5	S235	1.81	0.0	_BEAM
558	414	415	TCAR80x5	S235	1.81	0.0	_BEAM
559	415	416	TCAR80x5	S235	1.81	0.0	_BEAM
560	416	417	TCAR80x5	S235	0.95	0.0	_BEAM
561	418	419	TCAR80x5	S235	0.95	0.0	_BEAM

Bar	Node 1	Node 2	Section	Material	Length (m)	Gamma (Deg)	Type
562	419	420	TCAR80x5	S235	1.81	0.0	_BEAM
563	420	421	TCAR80x5	S235	1.81	0.0	_BEAM
564	421	422	TCAR80x5	S235	1.81	0.0	_BEAM
565	422	423	TCAR80x5	S235	0.95	0.0	_BEAM

Data – Sections

Section name	Bar list	AX (cm2)	AY (cm2)	AZ (cm2)	IX (cm4)	IY (cm4)	IZ (cm4)
TCAR80x5	200 201 211to217By2 218 228to234By2 2-35 430 431 465 469 473 479to481 490 491 528to533 551to565	14.88	6.61	6.61	217.10	138.70	138.70
CAE50x5	1to7 13 292to295 297 298 311to314 319t-o322 470to494By8 471 474 475 477 485 492 498to501 542to549	4.80	2.50	2.50	0.40	10.96	10.96
HE100A	41to47 53 55 61to67 73 75 81to87 93 95 413to419 421 423 484 487to489 495to497 515to527 535 550	21.24	15.98	5.25	4.69	349.22	133.81
TREC80x40x5	8to12 212 214 216 229 231 233 466 472 476 536to541	10.88	4.84	4.84	65.05	82.38	26.17
TRON60x5	505to508	8.69	4.34	4.34	66.95	33.48	33.48

Data – Supports

Support name	List of nodes	List of edges	List of objects	Support conditions
PINNED_RZ	13 23 39to45By2 50 58to64-By2 69 77to83By2 88 308to-314By2 319 353 355 364 36-6 368 376 378 380			UX UY UZ RX RY RZ

4.2 ΦΟΡΤΙΣΕΙΣ

Μόνιμο φορτίο (1:DL1)

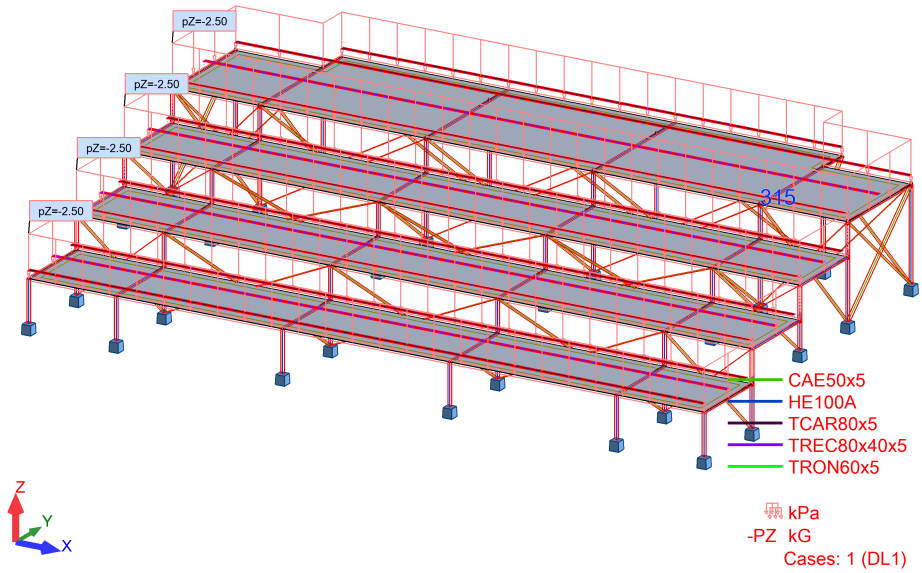

Κινητό φορτίο (2:LL1)

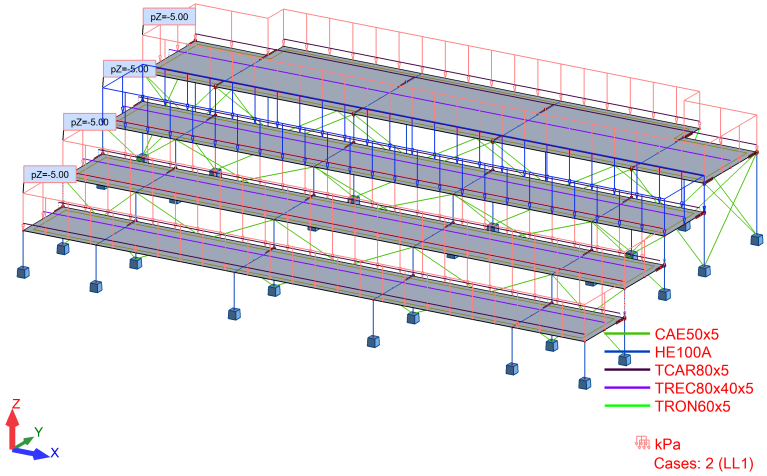

Σεισμικό φορτίο (27:EX+0.3EY)

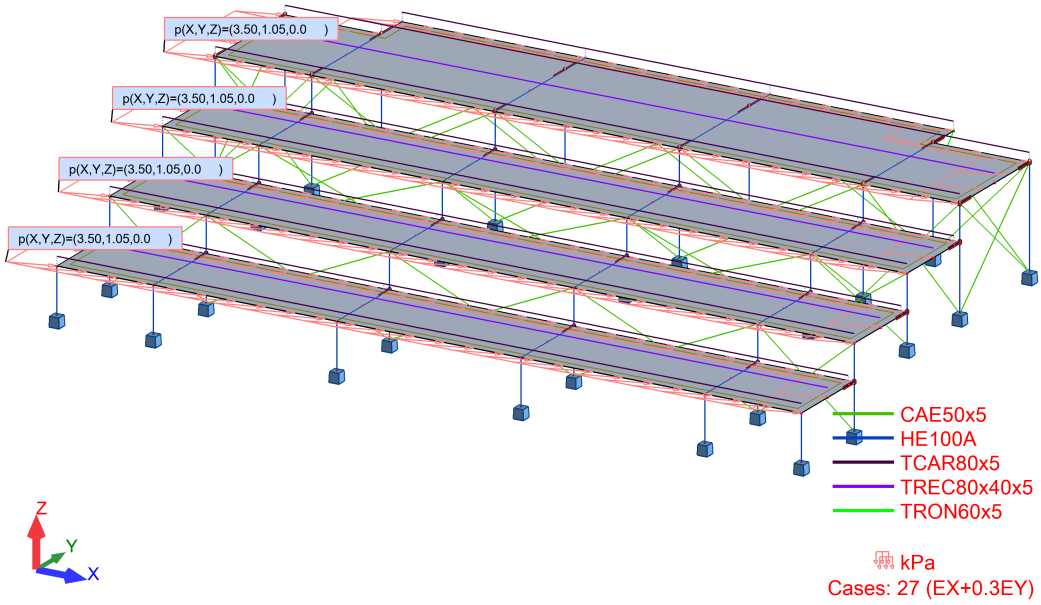

Σεισμικό φορτίο (28:EX-0.3EY)

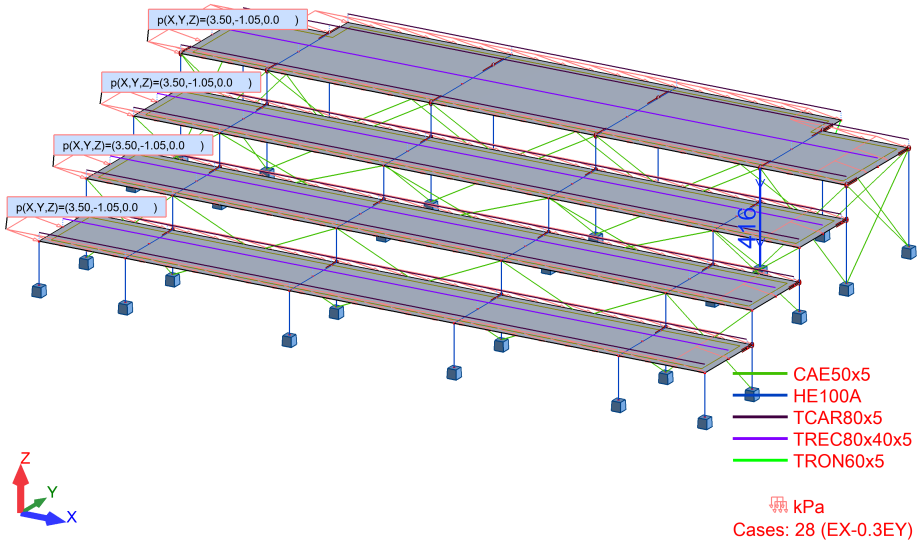

Σεισμικό φορτίο (29:0.3EX+EY)

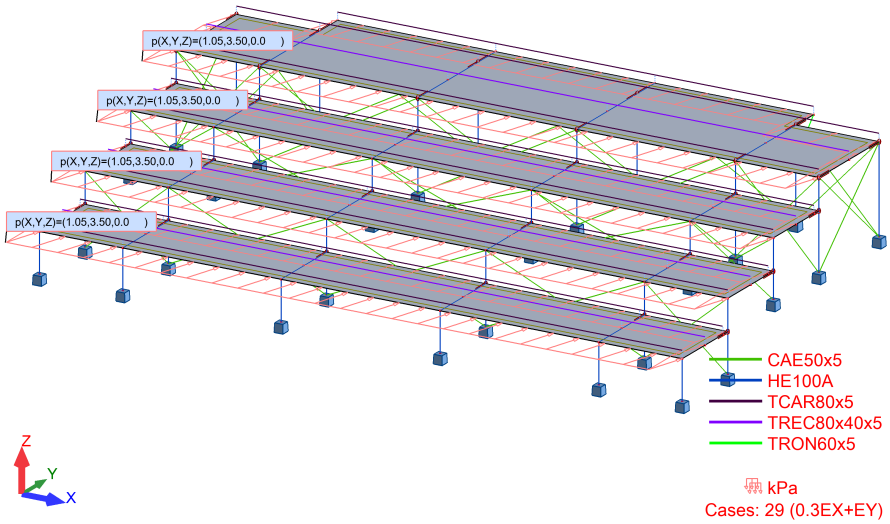

Σεισμικό φορτίο (30:0.3EX-EY)

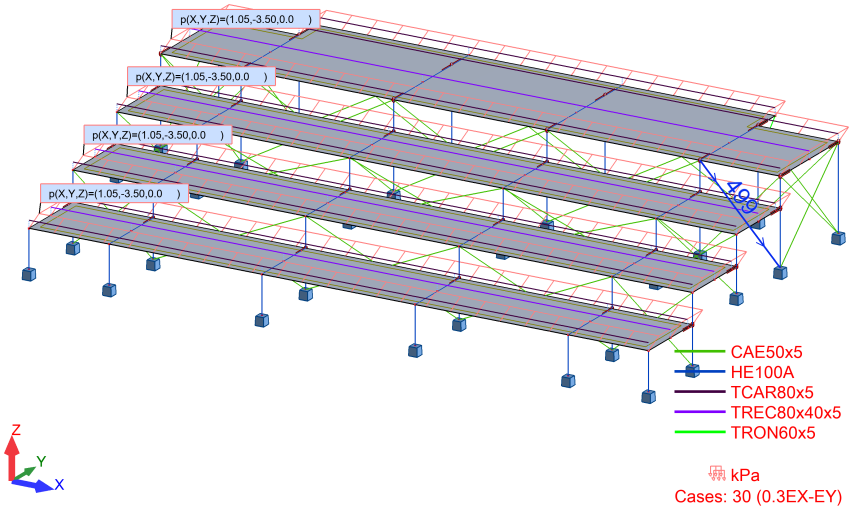

Loads – Cases

Case	Label	Case name	Nature	Analysis type
1	DL1	DL1	Structural	Static - Linear
2	LL1	LL1	Category C	Static - Linear
3	DL2	DL2	Structural	Static - Linear
4		ULS		Static - Linear
5		ULS+		Static - Linear
6		ULS-		Static - Linear
7		SLS		Static - Linear
8		SLS+		Static - Linear
9		SLS-		Static - Linear
10		SLS:CHR		Static - Linear
11		SLS:CHR+		Static - Linear
12		SLS:CHR-		Static - Linear
13		SLS:FRE		Static - Linear
14		SLS:FRE+		Static - Linear
15		SLS:FRE-		Static - Linear
16		SLS:QPR		Static - Linear
17		SLS:QPR+		Static - Linear
18		SLS:QPR-		Static - Linear
19		ACC		Static - Linear
20		ACC+		Static - Linear
21		ACC-		Static - Linear
26	MOD26	Modal		Modal
27	EX+0.3EY	EX+0.3EY	seismic	Static - Linear
28	EX-0.3EY	EX-0.3EY	seismic	Static - Linear
29	0.3EX+EY	0.3EX+EY	seismic	Static - Linear
30	0.3EX-EY	0.3EX-EY	seismic	Static - Linear

Loads – Values

Case	Load type	List	Load values
1	self-weight	1to13 41to47 61to67 81to87 211to218 228to235 29-2to295 311to314 319to322 349to351 413to419 469-to481 484to492 494to501 504to508 515to533 53 55 73 75 93 95 200 201 297 298 421 423 430 431 465 466 535to565	PZ Negative Factor=1.00
1	(FE) uniform	349	PZ=-2.50(kN/m2)
1	(FE) uniform	350 351	PZ=-2.50(kN/m2)
1	(FE) uniform		PZ=-2.50(kN/m2)
1	(FE) uniform	504	PZ=-2.50(kN/m2)
2	(FE) uniform	349to351	PZ=-5.00(kN/m2)
2	(FE) uniform		PZ=-5.00(kN/m2)
2	(FE) uniform	504	PZ=-5.00(kN/m2)
3	self-weight	1to13 41to47 61to67 81to87 211to218 228to235 29-2to295 311to314 319to322 349to351 413to419 469-to481 484to492 494to501 504to508 515to533 53 55 73 75 93 95 200 201 297 298 421 423 430 431 465 466 535to565	PZ Negative Factor=1.00
27	(FE) uniform	349to351 504	PX=3.50(kN/m2) PY=1.05(kN/m2)
28	(FE) uniform	349to351 504	PX=3.50(kN/m2) PY=-1.05(kN/m2)
29	(FE) uniform	349to351 504	PX=1.05(kN/m2) PY=3.50(kN/m2)
30	(FE) uniform	349to351 504	PX=1.05(kN/m2) PY=-3.50(kN/m2)

Combinations

Combinations/Comp.	Definition
ULS/\t1	1*1.35 + 2*1.50
ULS/\t2	1*1.35
ULS/\t3	1*1.00 + 2*1.50
ULS/\t4	1*1.00
SLS:CHR/\t1	1*1.00 + 2*1.00
SLS:CHR/\t2	1*1.00
SLS:FRE/\t3	1*1.00 + 2*0.70
SLS:FRE/\t4	1*1.00
SLS:QPR/\t5	1*1.00 + 2*0.60
SLS:QPR/\t6	1*1.00
SLS:CHR/\t1	1*1.00 + 2*1.00
SLS:CHR/\t2	1*1.00
SLS:FRE/\t1	1*1.00 + 2*0.70
SLS:FRE/\t2	1*1.00
SLS:QPR/\t1	1*1.00 + 2*0.60
SLS:QPR/\t2	1*1.00
ACC:SEI/\t1	1*1.00 + 2*0.60 + 27*1.00
ACC:SEI/\t2	1*1.00 + 27*1.00
ACC:SEI/\t3	1*1.00
ACC:SEI/\t4	1*1.00 + 2*0.60 + 28*1.00
ACC:SEI/\t5	1*1.00 + 28*1.00
ACC:SEI/\t6	1*1.00 + 2*0.60 + 29*1.00
ACC:SEI/\t7	1*1.00 + 29*1.00
ACC:SEI/\t8	1*1.00 + 2*0.60 + 30*1.00
ACC:SEI/\t9	1*1.00 + 30*1.00
ACC:SEI/\t10	1*1.00 + 2*0.60 + 27*-1.00
ACC:SEI/\t11	1*1.00 + 27*-1.00
ACC:SEI/\t12	1*1.00 + 2*0.60 + 28*-1.00
ACC:SEI/\t13	1*1.00 + 28*-1.00
ACC:SEI/\t14	1*1.00 + 2*0.60 + 29*-1.00
ACC:SEI/\t15	1*1.00 + 29*-1.00
ACC:SEI/\t16	1*1.00 + 2*0.60 + 30*-1.00
ACC:SEI/\t17	1*1.00 + 30*-1.00

4.3 ΑΠΟΤΕΛΕΣΜΑΤΑ

ΜΟΝΙΜΟ ΦΟΡΤΙΟ (1:DL1)

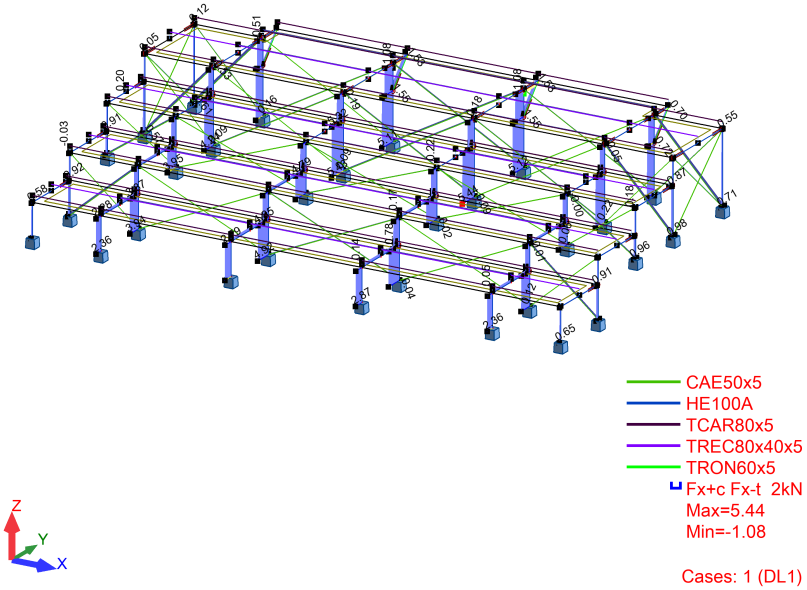

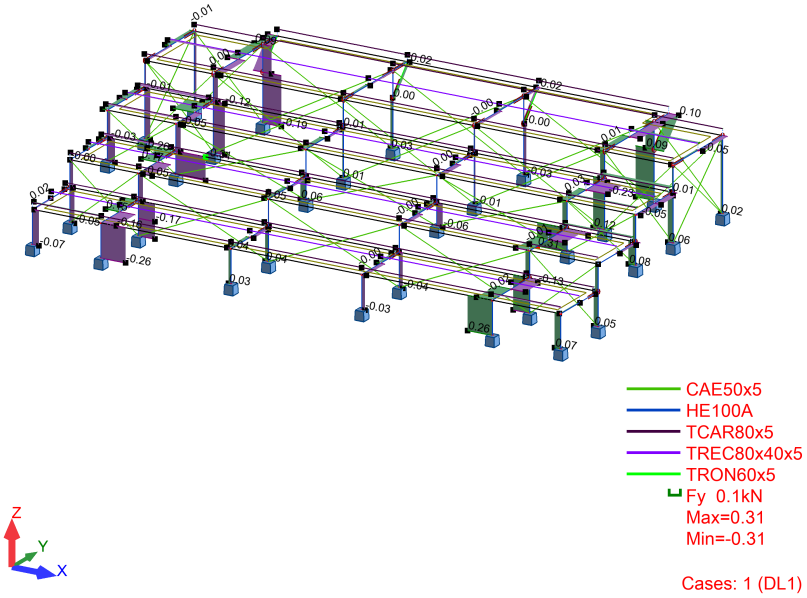

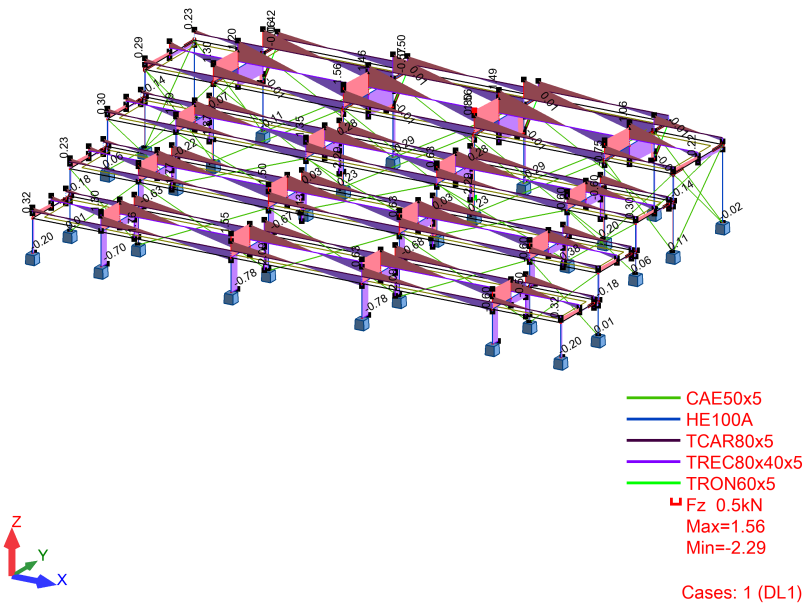
CAE50x5
HE100A
TCAR80x5
TREC80x40x5
TRON60x5
Fz 0.5kN
Max=1.56
Min=-2.29
Cases: 1 (DL1)
Z
Y
X

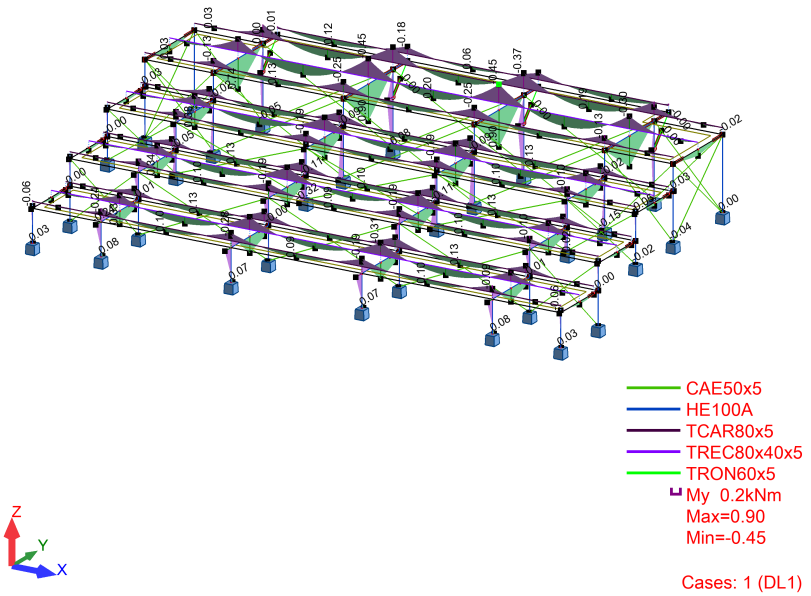
CAE50x5
HE100A
TCAR80x5
TREC80x40x5
TRON60x5
My 0.2kNm
Max=0.90
Min=-0.45
Cases: 1 (DL1)
Z
Y
X

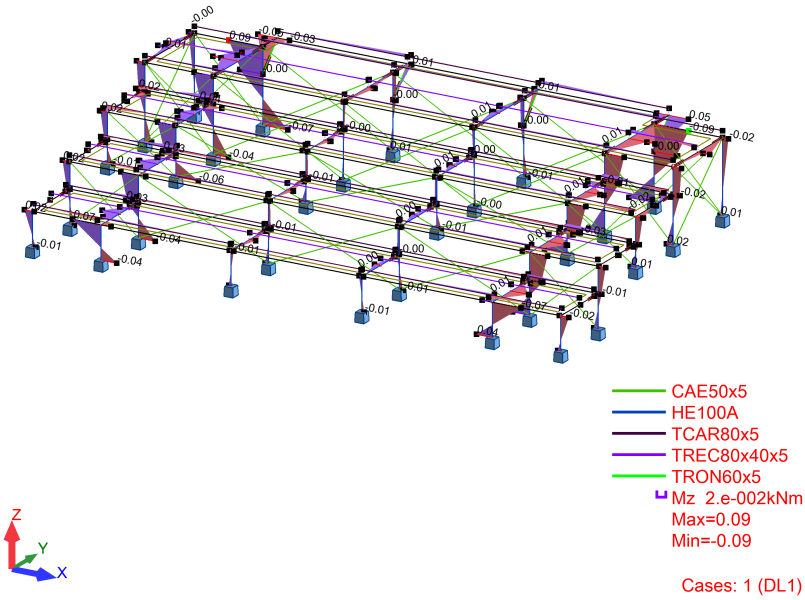
CAE50x5
HE100A
TCAR80x5
TREC80x40x5
TRON60x5
Mz 2.e-002kNm
Max=0.09
Min=-0.09
Cases: 1 (DL1)
Z
Y
X

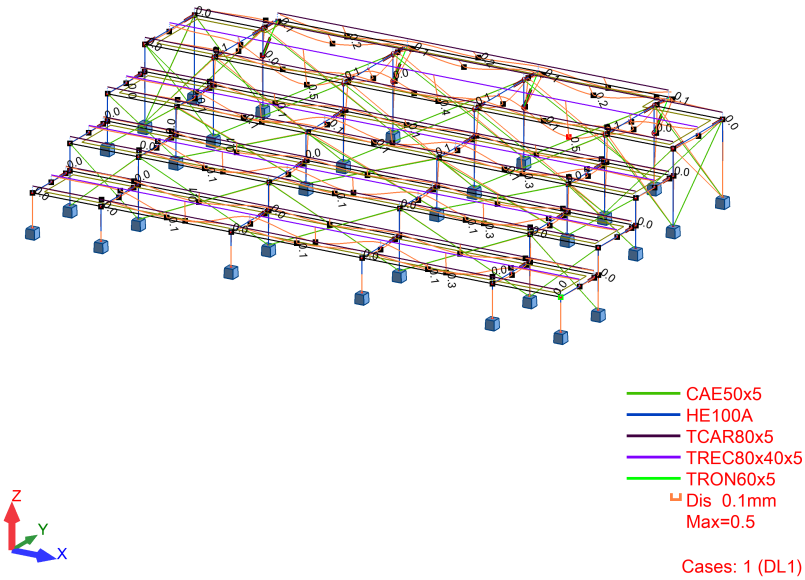
CAE50x5
HE100A
TCAR80x5
TREC80x40x5
TRON60x5
Dis 0.1mm
Max=0.5
Cases: 1 (DL1)
Z
Y
X

ΚΙΝΗΤΟ ΦΟΡΤΙΟ (2:LL1)

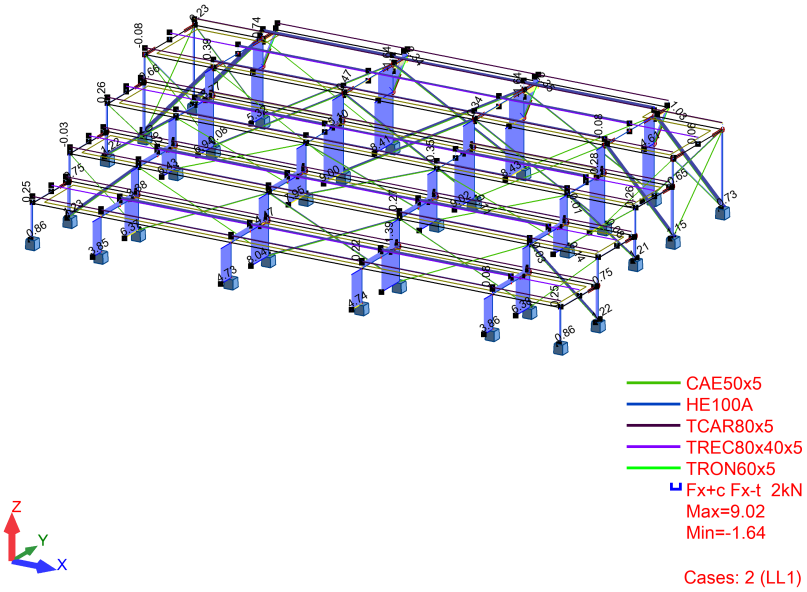

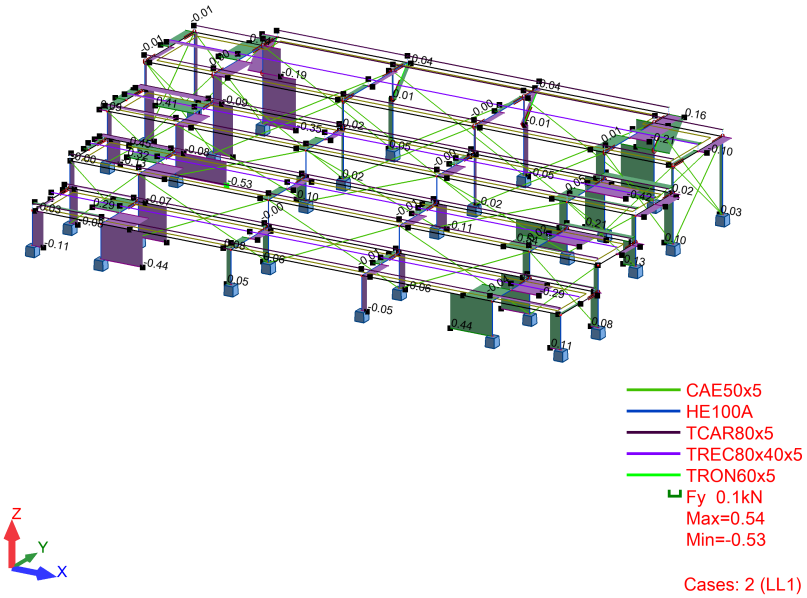

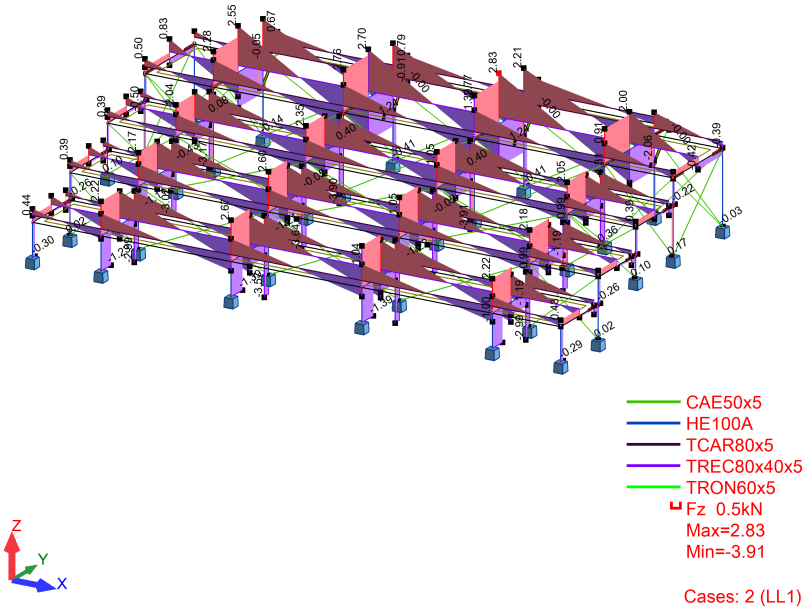
CAE50x5
HE100A
TCAR80x5
TREC80x40x5
TRON60x5
Fz 0.5kN
Max=2.83
Min=-3.91
Cases: 2 (LL1)
Z
Y
X

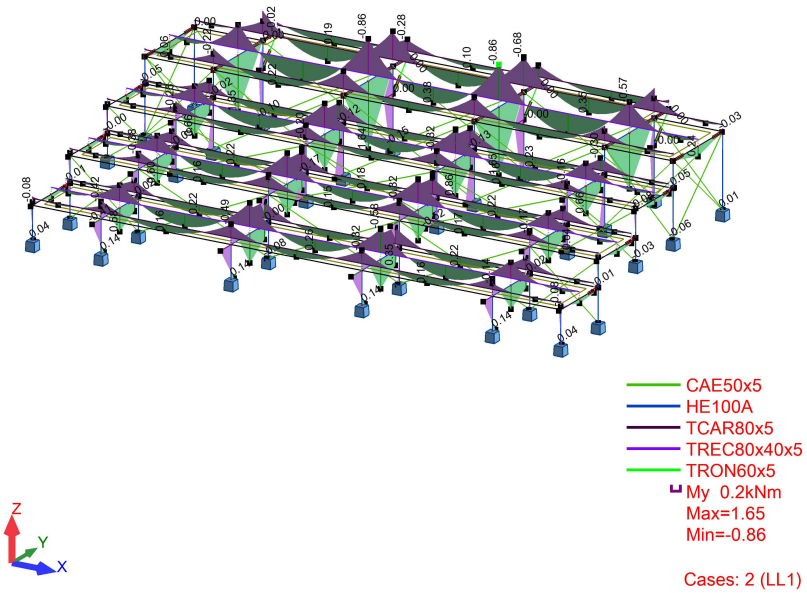
CAE50x5
HE100A
TCAR80x5
TREC80x40x5
TRON60x5
My 0.2kNm
Max=1.65
Min=-0.86
Cases: 2 (LL1)
Z
Y
X

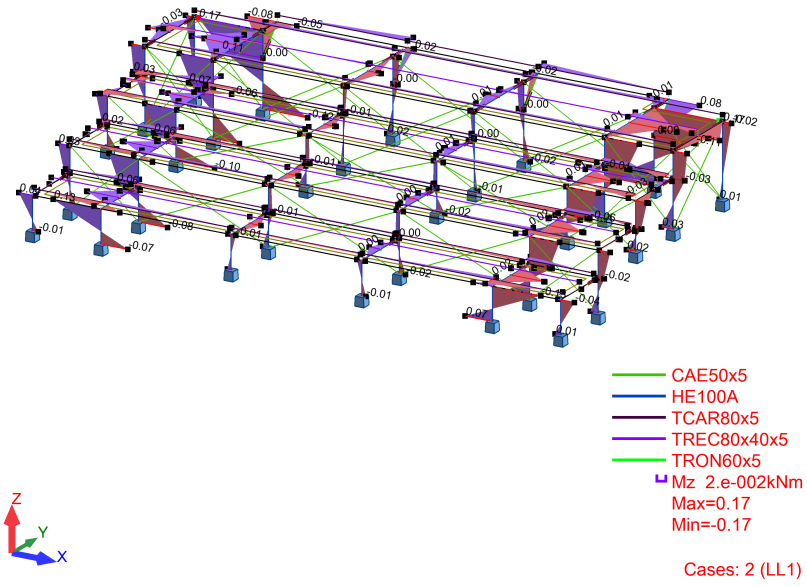
CAE50x5
HE100A
TCAR80x5
TREC80x40x5
TRON60x5
Mz 2.e-002kNm
Max=0.17
Min=-0.17
Cases: 2 (LL1)
Z
Y
X

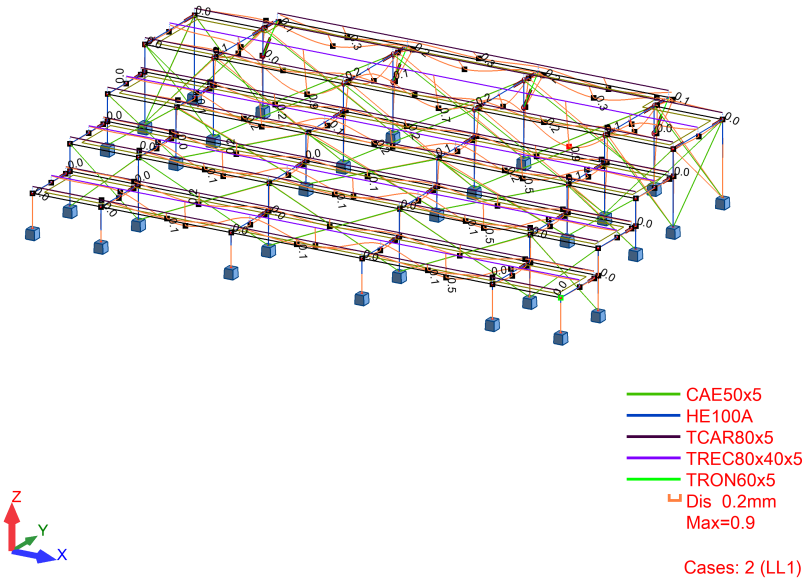
CAE50x5
HE100A
TCAR80x5
TREC80x40x5
TRON60x5
Dis 0.2mm
Max=0.9
Cases: 2 (LL1)
Z
Y
X

ΣΕΙΣΜΙΚΟ ΦΟΡΤΙΟ (27:EX+0.3EY)

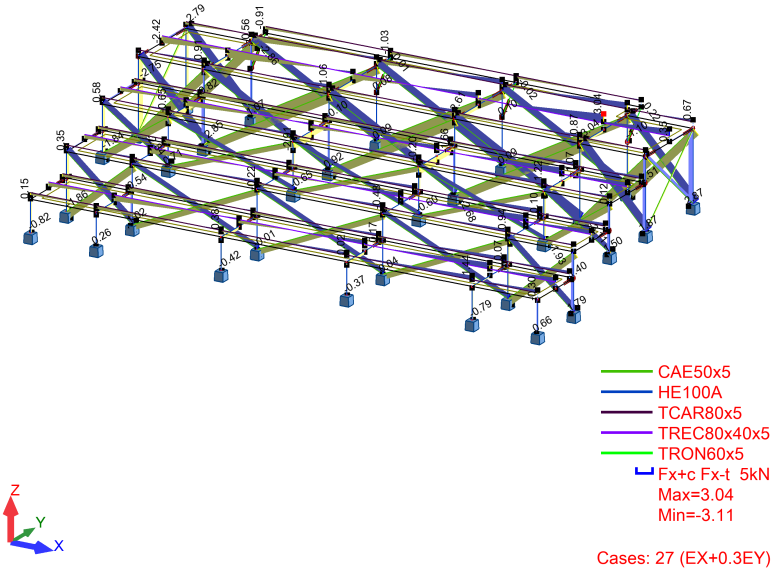

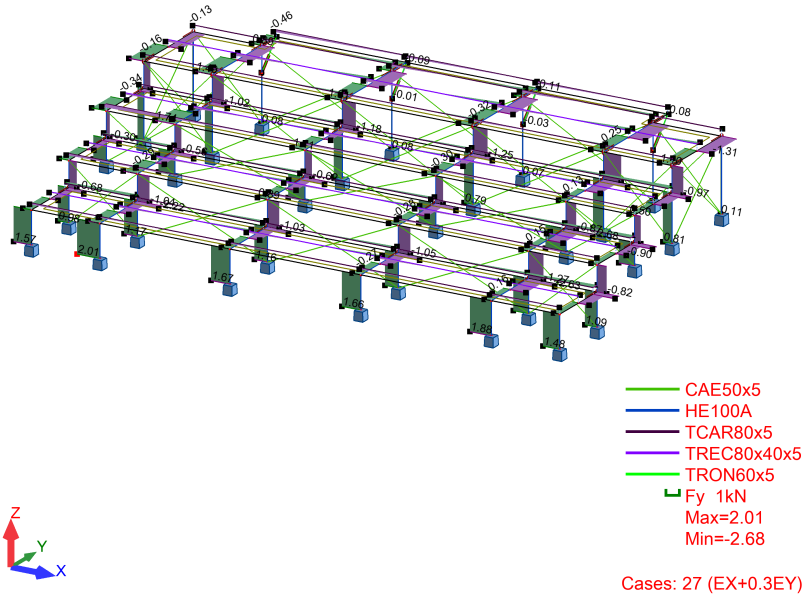

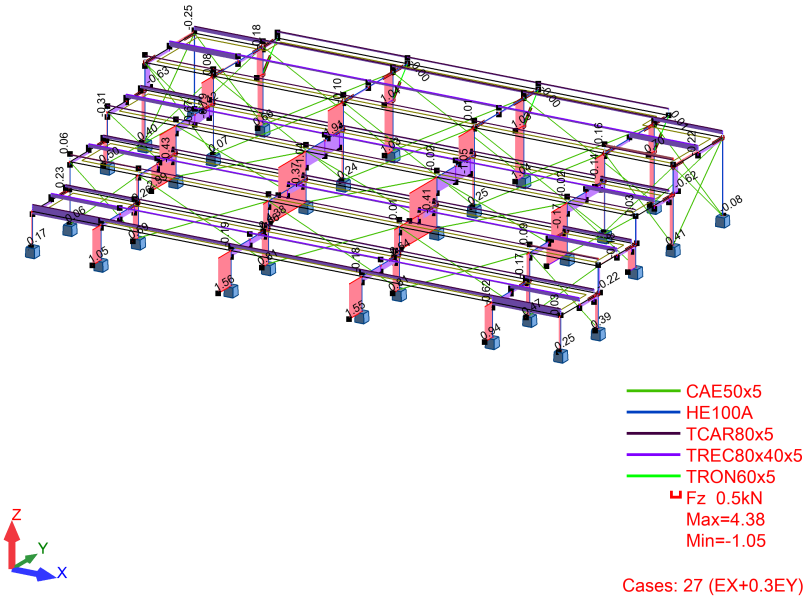
CAE50x5
HE100A
TCAR80x5
TREC80x40x5
TRON60x5
Fz 0.5kN
Max=4.38
Min=-1.05
Cases: 27 (EX+0.3EY)
Z
Y
X

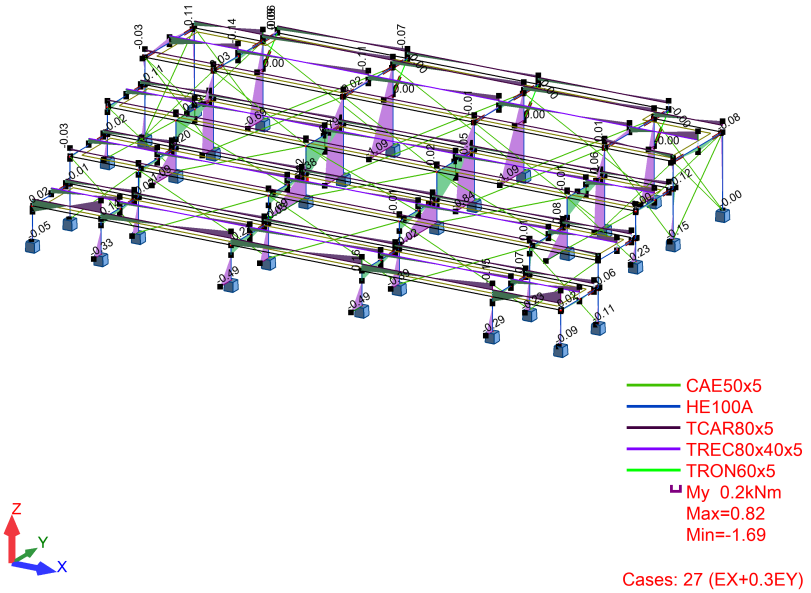
CAE50x5
HE100A
TCAR80x5
TREC80x40x5
TRON60x5
My 0.2kNm
Max=0.82
Min=-1.69
Cases: 27 (EX+0.3EY)
Z
Y
X

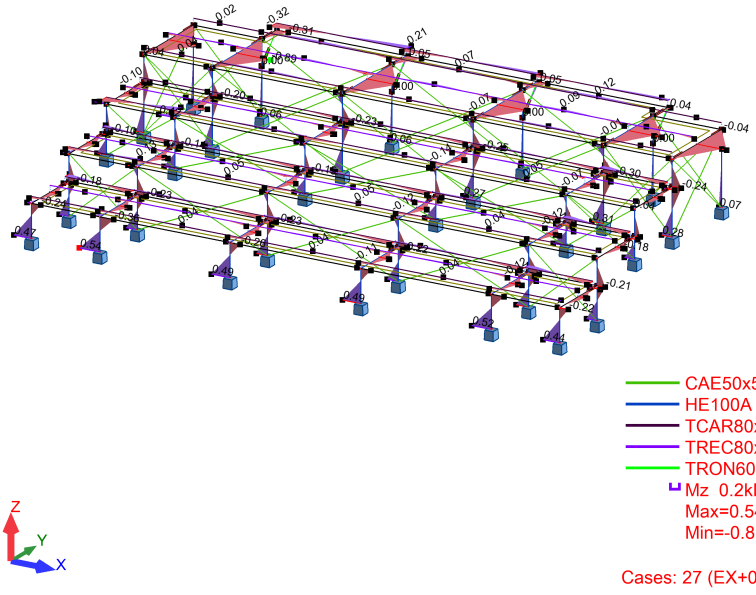
CAE50x5
HE100A
TCAR80x5
TREC80x40x5
TRON60x5
Mz 0.2kNm
Max=0.54
Min=-0.89
Cases: 27 (EX+0.3EY)
Z
Y
X

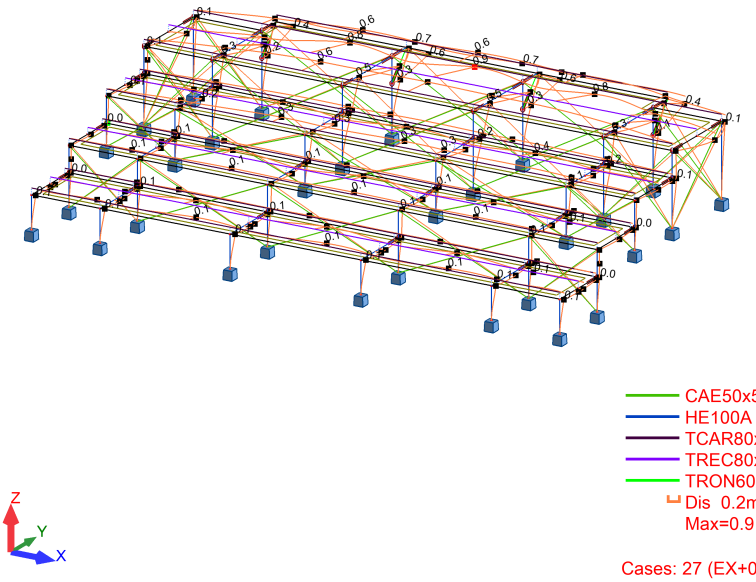
CAE50x5
HE100A
TCAR80x5
TREC80x40x5
TRON60x5
Dis 0.2mm
Max=0.9
Cases: 27 (EX+0.3EY)
Z
Y
X

ΣΕΙΣΜΙΚΟ ΦΟΡΤΙΟ (29:0.3EX+EY)

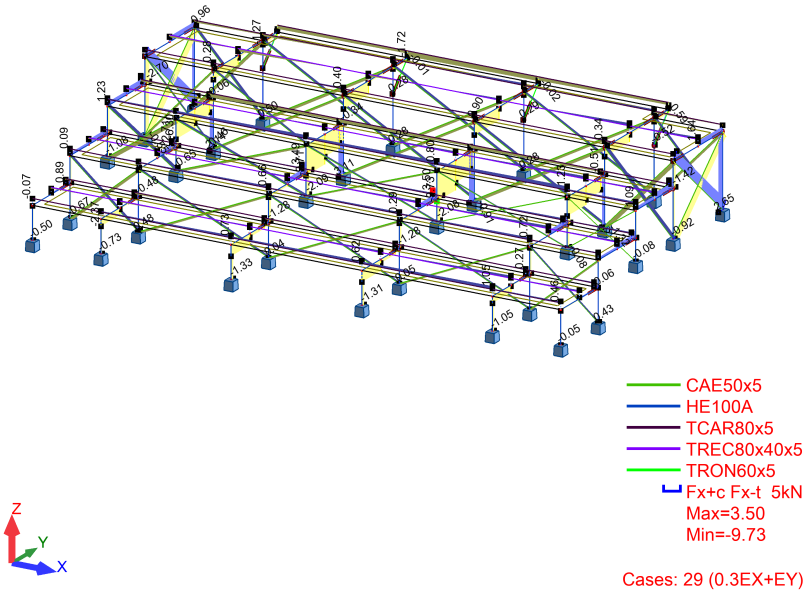

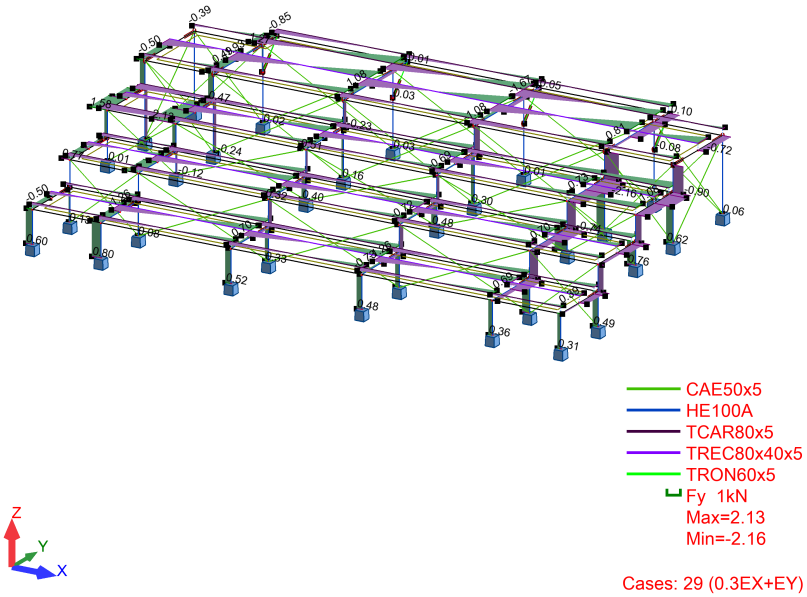

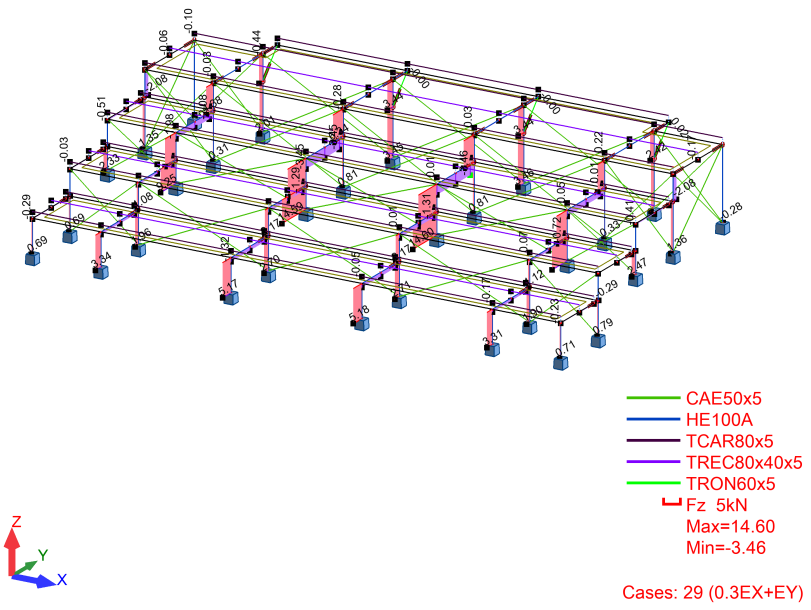
CAE50x5
HE100A
TCAR80x5
TREC80x40x5
TRON60x5
Fz 5kN
Max=14.60
Min=-3.46
Cases: 29 (0.3EX+EY)
Z
Y
X

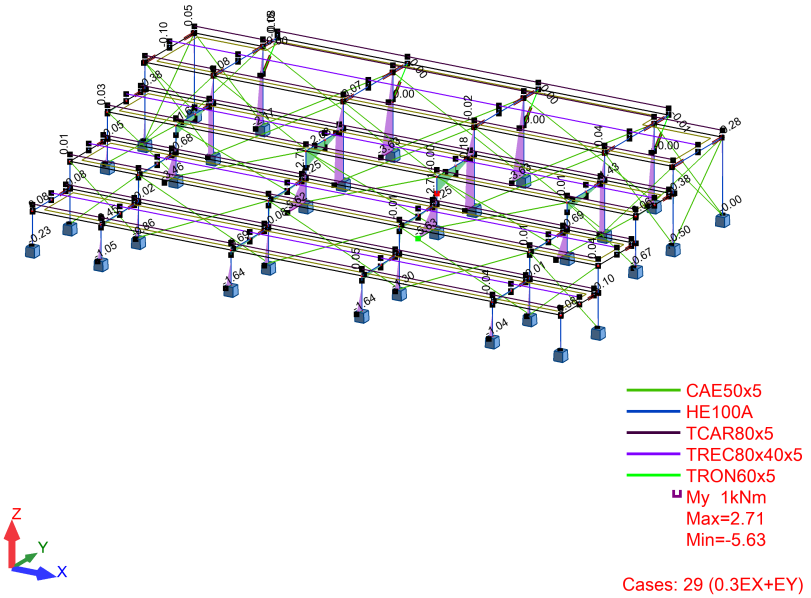
CAE50x5
HE100A
TCAR80x5
TREC80x40x5
TRON60x5
My 1kNm
Max=2.71
Min=-5.63
Cases: 29 (0.3EX+EY)
Z
Y
X

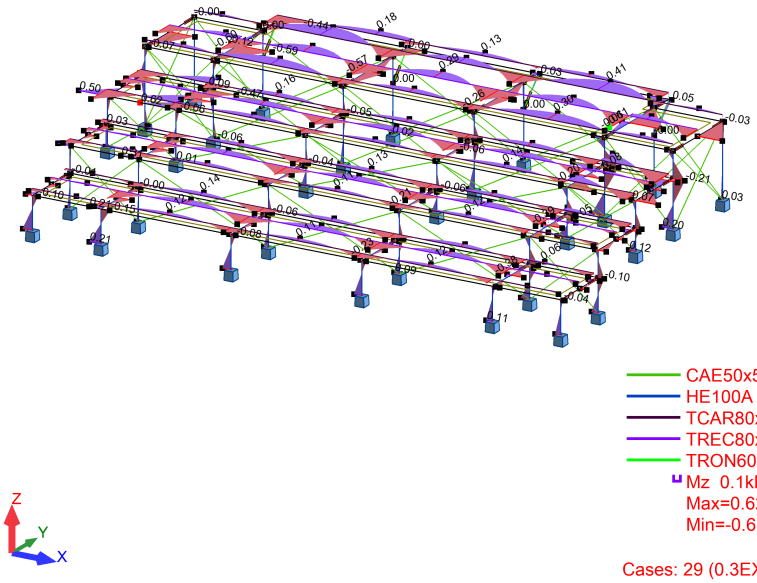
CAE50x5
HE100A
TCAR80x5
TREC80x40x5
TRON60x5
Mz 0.1kNm
Max=0.62
Min=-0.61
Cases: 29 (0.3EX+EY)
Z
Y
X

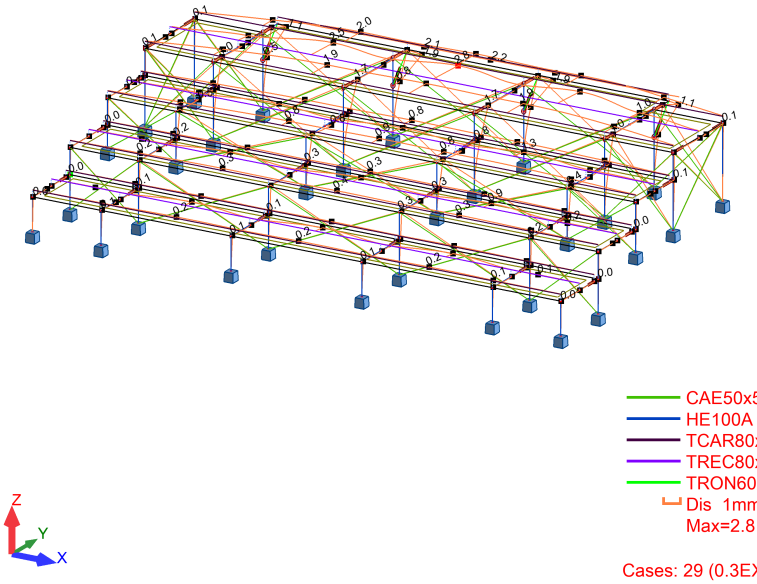
CAE50x5
HE100A
TCAR80x5
TREC80x40x5
TRON60x5
Dis 1mm
Max=2.8
Cases: 29 (0.3EX+EY)
Z
Y
X

Reactions – Values

Node/Case	FX (kN)	FY (kN)	FZ (kN)	MX (kNm)	MY (kNm)	MZ (kNm)
13/ULS+	1.68	-0.17	4.46	0.14	0.07	0
13/ULS-	0.43	-0.64	1.38	0.04	0.02	0
13/SLS+	1.16	-0.17	3.11	0.09	0.05	0
13/SLS-	0.43	-0.45	1.38	0.04	0.02	0
13/SLS:CHR+	1.16	-0.17	3.11	0.09	0.05	0
13/SLS:CHR-	0.43	-0.45	1.38	0.04	0.02	0
13/SLS:FRE+	0.94	-0.17	2.6	0.08	0.04	0
13/SLS:FRE-	0.43	-0.36	1.38	0.04	0.02	0
13/SLS:QPR+	0.87	-0.17	2.42	0.07	0.04	0
13/SLS:QPR-	0.43	-0.33	1.38	0.04	0.02	0
13/ACC+	3.77	3.59	8.07	0.57	0.32	0
13/ACC-	-2.47	-4.09	-4.26	-0.47	-0.26	-0.01
23/ULS+	1.69	-0.14	4.31	0	0.02	0
23/ULS-	0.43	-0.48	1.33	-0.01	0.01	0
23/SLS+	1.17	-0.14	3.01	0	0.02	0
23/SLS-	0.43	-0.34	1.33	-0.01	0.01	0
23/SLS:CHR+	1.17	-0.14	3.01	0	0.02	0
23/SLS:CHR-	0.43	-0.34	1.33	-0.01	0.01	0
23/SLS:FRE+	0.95	-0.14	2.51	0	0.01	0
23/SLS:FRE-	0.43	-0.28	1.33	-0.01	0.01	0
23/SLS:QPR+	0.87	-0.14	2.34	0	0.01	0
23/SLS:QPR-	0.43	-0.26	1.33	-0.01	0.01	0
23/ACC+	2.94	2.08	7.99	0	0.08	0
23/ACC-	-1.63	-2.47	-4.31	-0.01	-0.07	-0.01
39/ULS+	1	2.8	8.96	-0.08	0.16	0
39/ULS-	0.26	0.7	2.36	-0.32	0.04	0
39/SLS+	0.69	1.94	6.21	-0.08	0.11	0
39/SLS-	0.26	0.7	2.36	-0.22	0.04	0
39/SLS:CHR+	0.69	1.94	6.21	-0.08	0.11	0
39/SLS:CHR-	0.26	0.7	2.36	-0.22	0.04	0
39/SLS:FRE+	0.56	1.57	5.05	-0.08	0.09	0
39/SLS:FRE-	0.26	0.7	2.36	-0.18	0.04	0
39/SLS:QPR+	0.52	1.44	4.67	-0.08	0.08	0
39/SLS:QPR-	0.26	0.7	2.36	-0.17	0.04	0
39/ACC+	2.53	4.78	5.71	0.97	0.63	0
39/ACC-	-1.75	-2.63	1.31	-1.22	-0.5	0
41/ULS+	0.86	-0.08	15.28	0.1	0.17	0
41/ULS-	0.21	-0.33	4.09	0.03	0.04	0
41/SLS+	0.6	-0.08	10.59	0.07	0.12	0
41/SLS-	0.21	-0.23	4.09	0.03	0.04	0
41/SLS:CHR+	0.6	-0.08	10.59	0.07	0.12	0
41/SLS:CHR-	0.21	-0.23	4.09	0.03	0.04	0

41/SLS:FRE+	0.48	-0.08	8.64	0.06	0.1	0
41/SLS:FRE-	0.21	-0.18	4.09	0.03	0.04	0
41/SLS:QPR+	0.44	-0.08	7.99	0.05	0.09	0
41/SLS:QPR-	0.21	-0.17	4.09	0.03	0.04	0
41/ACC+	5.09	1.88	9.78	0.92	0.42	0
41/ACC-	-4.43	-2.13	2.31	-0.84	-0.29	0
43/ULS+	1.13	-0.38	15.31	0.64	0.23	0
43/ULS-	0.28	-1.46	4.08	0.17	0.06	0
43/SLS+	0.78	-0.38	10.62	0.44	0.16	0
43/SLS-	0.28	-1.01	4.08	0.17	0.06	0
43/SLS:CHR+	0.78	-0.38	10.62	0.44	0.16	0
43/SLS:CHR-	0.28	-1.01	4.08	0.17	0.06	0
43/SLS:FRE+	0.63	-0.38	8.66	0.36	0.13	0
43/SLS:FRE-	0.28	-0.82	4.08	0.17	0.06	0
43/SLS:QPR+	0.58	-0.38	8	0.33	0.12	0
43/SLS:QPR-	0.28	-0.76	4.08	0.17	0.06	0
43/ACC+	5.38	8.87	9.87	3.79	0.46	0
43/ACC-	-4.52	-10.01	2.22	-3.29	-0.28	0
45/ULS+	1.01	-0.2	16.76	0.57	0.16	0
45/ULS-	0.25	-0.8	4.45	0.15	0.04	0
45/SLS+	0.7	-0.2	11.62	0.4	0.11	0
45/SLS-	0.25	-0.56	4.45	0.15	0.04	0
45/SLS:CHR+	0.7	-0.2	11.62	0.4	0.11	0
45/SLS:CHR-	0.25	-0.56	4.45	0.15	0.04	0
45/SLS:FRE+	0.56	-0.2	9.47	0.32	0.09	0
45/SLS:FRE-	0.25	-0.45	4.45	0.15	0.04	0
45/SLS:QPR+	0.52	-0.2	8.75	0.3	0.08	0
45/SLS:QPR-	0.25	-0.41	4.45	0.15	0.04	0
45/ACC+	5.88	0.13	11.19	1.95	0.39	0
45/ACC-	-5.11	-0.74	2.01	-1.51	-0.27	0
50/ULS+	1.01	0.37	13.28	0.22	0.27	0
50/ULS-	0.25	0.11	3.59	0.05	0.07	0
50/SLS+	0.7	0.26	9.21	0.15	0.18	0
50/SLS-	0.25	0.11	3.59	0.05	0.07	0
50/SLS:CHR+	0.7	0.26	9.21	0.15	0.18	0
50/SLS:CHR-	0.25	0.11	3.59	0.05	0.07	0
50/SLS:FRE+	0.57	0.22	7.52	0.12	0.15	0
50/SLS:FRE-	0.25	0.11	3.59	0.05	0.07	0
50/SLS:QPR+	0.52	0.2	6.96	0.11	0.14	0
50/SLS:QPR-	0.25	0.11	3.59	0.05	0.07	0
50/ACC+	4.84	2.21	8.77	2.28	0.19	0
50/ACC-	-4.06	-1.89	1.78	-2.12	0.01	-0.01
58/ULS+	-0.03	3.14	10.96	-0.07	-0.01	0
58/ULS-	-0.11	0.78	2.86	-0.3	-0.02	0

58/SLS+	-0.03	2.17	7.59	-0.07	-0.01	0
58/SLS-	-0.08	0.78	2.86	-0.21	-0.02	0
58/SLS:CHR+	-0.03	2.17	7.59	-0.07	-0.01	0
58/SLS:CHR-	-0.08	0.78	2.86	-0.21	-0.02	0
58/SLS:FRE+	-0.03	1.75	6.17	-0.07	-0.01	0
58/SLS:FRE-	-0.06	0.78	2.86	-0.17	-0.01	0
58/SLS:QPR+	-0.03	1.61	5.7	-0.07	-0.01	0
58/SLS:QPR-	-0.06	0.78	2.86	-0.15	-0.01	0
58/ACC+	1.64	6.79	7.03	1.56	0.48	0
58/ACC-	-1.73	-4.39	1.53	-1.79	-0.5	0
60/ULS+	0.44	-0.1	19.12	0.18	-0.01	0
60/ULS-	0.11	-0.41	5.08	0.05	-0.04	0
60/SLS+	0.31	-0.1	13.26	0.13	-0.01	0
60/SLS-	0.11	-0.28	5.08	0.05	-0.02	0
60/SLS:CHR+	0.31	-0.1	13.26	0.13	-0.01	0
60/SLS:CHR-	0.11	-0.28	5.08	0.05	-0.02	0
60/SLS:FRE+	0.25	-0.1	10.8	0.1	-0.01	0
60/SLS:FRE-	0.11	-0.23	5.08	0.05	-0.02	0
60/SLS:QPR+	0.23	-0.1	9.99	0.1	-0.01	0
60/SLS:QPR-	0.11	-0.21	5.08	0.05	-0.02	0
60/ACC+	4.68	2.6	10.09	1.39	0.29	0
60/ACC-	-4.34	-2.92	4.97	-1.25	-0.31	0
62/ULS+	0.23	-0.7	18.74	1.21	-0.01	0
62/ULS-	0.06	-2.68	4.96	0.32	-0.05	0
62/SLS+	0.16	-0.7	12.99	0.84	-0.01	0
62/SLS-	0.06	-1.86	4.96	0.32	-0.03	0
62/SLS:CHR+	0.16	-0.7	12.99	0.84	-0.01	0
62/SLS:CHR-	0.06	-1.86	4.96	0.32	-0.03	0
62/SLS:FRE+	0.13	-0.7	10.58	0.68	-0.01	0
62/SLS:FRE-	0.06	-1.51	4.96	0.32	-0.03	0
62/SLS:QPR+	0.12	-0.7	9.78	0.63	-0.01	0
62/SLS:QPR-	0.06	-1.4	4.96	0.32	-0.02	0
62/ACC+	4.53	13.88	11.76	6.26	0.28	0
62/ACC-	-4.36	-15.98	2.98	-5.31	-0.31	0
64/ULS+	0.66	-0.23	21.59	0.93	0	0
64/ULS-	0.17	-0.96	5.68	0.24	-0.02	0
64/SLS+	0.46	-0.23	14.96	0.64	0	0
64/SLS-	0.17	-0.66	5.68	0.24	-0.01	0
64/SLS:CHR+	0.46	-0.23	14.96	0.64	0	0
64/SLS:CHR-	0.17	-0.66	5.68	0.24	-0.01	0
64/SLS:FRE+	0.37	-0.23	12.18	0.52	0	0
64/SLS:FRE-	0.17	-0.53	5.68	0.24	-0.01	0
64/SLS:QPR+	0.34	-0.23	11.25	0.48	0	0
64/SLS:QPR-	0.17	-0.49	5.68	0.24	-0.01	0

64/ACC+	5.74	0.58	14.36	3.3	0.26	0
64/ACC-	-5.24	-1.3	2.57	-2.58	-0.28	0
69/ULS+	1.13	1.01	20.12	0.33	-0.01	0
69/ULS-	0.28	0.29	5.32	0.08	-0.04	0
69/SLS+	0.78	0.7	13.95	0.23	-0.01	0
69/SLS-	0.28	0.29	5.32	0.08	-0.03	0
69/SLS:CHR+	0.78	0.7	13.95	0.23	-0.01	0
69/SLS:CHR-	0.28	0.29	5.32	0.08	-0.03	0
69/SLS:FRE+	0.63	0.58	11.36	0.19	-0.01	0
69/SLS:FRE-	0.28	0.29	5.32	0.08	-0.02	0
69/SLS:QPR+	0.58	0.54	10.5	0.17	-0.01	0
69/SLS:QPR-	0.28	0.29	5.32	0.08	-0.02	0
69/ACC+	5.2	3.99	10.85	3.8	0.05	0
69/ACC-	-4.35	-3.16	4.97	-3.54	-0.08	0
77/ULS+	0.12	3.14	10.98	-0.07	0.02	0
77/ULS-	0.03	0.78	2.87	-0.3	0.01	0
77/SLS+	0.08	2.17	7.61	-0.07	0.02	0
77/SLS-	0.03	0.78	2.87	-0.21	0.01	0
77/SLS:CHR+	0.08	2.17	7.61	-0.07	0.02	0
77/SLS:CHR-	0.03	0.78	2.87	-0.21	0.01	0
77/SLS:FRE+	0.07	1.75	6.18	-0.07	0.01	0
77/SLS:FRE-	0.03	0.78	2.87	-0.17	0.01	0
77/SLS:QPR+	0.06	1.62	5.71	-0.07	0.01	0
77/SLS:QPR-	0.03	0.78	2.87	-0.15	0.01	0
77/ACC+	1.73	6.8	7.04	1.57	0.5	0
77/ACC-	-1.64	-4.4	1.54	-1.79	-0.48	0
79/ULS+	-0.11	-0.1	19.15	0.18	0.04	0
79/ULS-	-0.44	-0.41	5.09	0.05	0.01	0
79/SLS+	-0.11	-0.1	13.28	0.13	0.03	0
79/SLS-	-0.3	-0.28	5.09	0.05	0.01	0
79/SLS:CHR+	-0.11	-0.1	13.28	0.13	0.03	0
79/SLS:CHR-	-0.3	-0.28	5.09	0.05	0.01	0
79/SLS:FRE+	-0.11	-0.1	10.82	0.1	0.02	0
79/SLS:FRE-	-0.25	-0.23	5.09	0.05	0.01	0
79/SLS:QPR+	-0.11	-0.1	10	0.1	0.02	0
79/SLS:QPR-	-0.23	-0.21	5.09	0.05	0.01	0
79/ACC+	4.34	2.6	10.11	1.4	0.32	0
79/ACC-	-4.68	-2.92	4.98	-1.25	-0.29	0
81/ULS+	-0.05	-0.7	18.77	1.21	0.05	0
81/ULS-	-0.22	-2.69	4.97	0.32	0.01	0
81/SLS+	-0.05	-0.7	13.01	0.84	0.03	0
81/SLS-	-0.15	-1.86	4.97	0.32	0.01	0
81/SLS:CHR+	-0.05	-0.7	13.01	0.84	0.03	0
81/SLS:CHR-	-0.15	-1.86	4.97	0.32	0.01	0

81/SLS:FRE+	-0.05	-0.7	10.6	0.68	0.03	0
81/SLS:FRE-	-0.12	-1.51	4.97	0.32	0.01	0
81/SLS:QPR+	-0.05	-0.7	9.79	0.63	0.02	0
81/SLS:QPR-	-0.11	-1.4	4.97	0.32	0.01	0
81/ACC+	4.36	13.9	11.77	6.27	0.32	0
81/ACC-	-4.53	-16.01	2.98	-5.31	-0.28	0
83/ULS+	-0.17	-0.23	21.63	0.93	0.02	0
83/ULS-	-0.66	-0.96	5.68	0.24	0	0
83/SLS+	-0.17	-0.23	14.99	0.64	0.01	0
83/SLS-	-0.45	-0.66	5.68	0.24	0	0
83/SLS:CHR+	-0.17	-0.23	14.99	0.64	0.01	0
83/SLS:CHR-	-0.45	-0.66	5.68	0.24	0	0
83/SLS:FRE+	-0.17	-0.23	12.2	0.52	0.01	0
83/SLS:FRE-	-0.37	-0.53	5.68	0.24	0	0
83/SLS:QPR+	-0.17	-0.23	11.27	0.48	0.01	0
83/SLS:QPR-	-0.34	-0.49	5.68	0.24	0	0
83/ACC+	5.24	0.58	14.37	3.3	0.28	0
83/ACC-	-5.74	-1.3	2.58	-2.58	-0.26	0
88/ULS+	-0.28	1.01	20.15	0.33	0.04	0
88/ULS-	-1.13	0.29	5.33	0.08	0.01	0
88/SLS+	-0.28	0.7	13.97	0.23	0.03	0
88/SLS-	-0.78	0.29	5.33	0.08	0.01	0
88/SLS:CHR+	-0.28	0.7	13.97	0.23	0.03	0
88/SLS:CHR-	-0.78	0.29	5.33	0.08	0.01	0
88/SLS:FRE+	-0.28	0.58	11.38	0.19	0.02	0
88/SLS:FRE-	-0.63	0.29	5.33	0.08	0.01	0
88/SLS:QPR+	-0.28	0.54	10.51	0.17	0.02	0
88/SLS:QPR-	-0.58	0.29	5.33	0.08	0.01	0
88/ACC+	4.35	3.99	10.86	3.8	0.08	0
88/ACC-	-5.2	-3.17	4.97	-3.55	-0.05	0
308/ULS+	-0.26	2.81	8.98	-0.08	-0.04	0
308/ULS-	-1.01	0.71	2.36	-0.32	-0.16	0
308/SLS+	-0.26	1.94	6.22	-0.08	-0.04	0
308/SLS-	-0.7	0.71	2.36	-0.22	-0.11	0
308/SLS:CHR+	-0.26	1.94	6.22	-0.08	-0.04	0
308/SLS:CHR-	-0.7	0.71	2.36	-0.22	-0.11	0
308/SLS:FRE+	-0.26	1.57	5.06	-0.08	-0.04	0
308/SLS:FRE-	-0.57	0.71	2.36	-0.18	-0.09	0
308/SLS:QPR+	-0.26	1.45	4.68	-0.08	-0.04	0
308/SLS:QPR-	-0.52	0.71	2.36	-0.17	-0.08	0
308/ACC+	1.75	4.79	5.72	0.97	0.5	0
308/ACC-	-2.53	-2.64	1.32	-1.22	-0.63	0
310/ULS+	-0.21	-0.08	15.31	0.1	-0.04	0
310/ULS-	-0.87	-0.33	4.1	0.03	-0.18	0

310/SLS+	-0.21	-0.08	10.62	0.07	-0.04	0
310/SLS-	-0.6	-0.23	4.1	0.03	-0.12	0
310/SLS:CHR+	-0.21	-0.08	10.62	0.07	-0.04	0
310/SLS:CHR-	-0.6	-0.23	4.1	0.03	-0.12	0
310/SLS:FRE+	-0.21	-0.08	8.66	0.06	-0.04	0
310/SLS:FRE-	-0.48	-0.18	4.1	0.03	-0.1	0
310/SLS:QPR+	-0.21	-0.08	8.01	0.05	-0.04	0
310/SLS:QPR-	-0.44	-0.17	4.1	0.03	-0.09	0
310/ACC+	4.43	1.88	9.81	0.92	0.29	0
310/ACC-	-5.09	-2.14	2.31	-0.84	-0.42	0
312/ULS+	-0.28	-0.38	15.35	0.64	-0.06	0
312/ULS-	-1.13	-1.46	4.09	0.17	-0.23	0
312/SLS+	-0.28	-0.38	10.64	0.44	-0.06	0
312/SLS-	-0.78	-1.01	4.09	0.17	-0.16	0
312/SLS:CHR+	-0.28	-0.38	10.64	0.44	-0.06	0
312/SLS:CHR-	-0.78	-1.01	4.09	0.17	-0.16	0
312/SLS:FRE+	-0.28	-0.38	8.68	0.36	-0.06	0
312/SLS:FRE-	-0.63	-0.82	4.09	0.17	-0.13	0
312/SLS:QPR+	-0.28	-0.38	8.02	0.33	-0.06	0
312/SLS:QPR-	-0.58	-0.76	4.09	0.17	-0.12	0
312/ACC+	4.52	8.89	9.9	3.8	0.28	0
312/ACC-	-5.39	-10.03	2.22	-3.3	-0.46	0
314/ULS+	-0.25	-0.2	16.79	0.57	-0.04	0
314/ULS-	-1.01	-0.81	4.46	0.15	-0.16	0
314/SLS+	-0.25	-0.2	11.64	0.4	-0.04	0
314/SLS-	-0.7	-0.56	4.46	0.15	-0.11	0
314/SLS:CHR+	-0.25	-0.2	11.64	0.4	-0.04	0
314/SLS:CHR-	-0.7	-0.56	4.46	0.15	-0.11	0
314/SLS:FRE+	-0.25	-0.2	9.49	0.32	-0.04	0
314/SLS:FRE-	-0.56	-0.45	4.46	0.15	-0.09	0
314/SLS:QPR+	-0.25	-0.2	8.77	0.3	-0.04	0
314/SLS:QPR-	-0.52	-0.41	4.46	0.15	-0.08	0
314/ACC+	5.11	0.13	11.22	1.95	0.27	0
314/ACC-	-5.88	-0.74	2.01	-1.51	-0.39	0
319/ULS+	-0.25	0.37	13.31	0.22	-0.07	0
319/ULS-	-1.01	0.12	3.59	0.05	-0.27	0
319/SLS+	-0.25	0.26	9.23	0.15	-0.07	0
319/SLS-	-0.7	0.12	3.59	0.05	-0.18	0
319/SLS:CHR+	-0.25	0.26	9.23	0.15	-0.07	0
319/SLS:CHR-	-0.7	0.12	3.59	0.05	-0.18	0
319/SLS:FRE+	-0.25	0.22	7.54	0.12	-0.07	0
319/SLS:FRE-	-0.56	0.12	3.59	0.05	-0.15	0
319/SLS:QPR+	-0.25	0.2	6.98	0.11	-0.07	0
319/SLS:QPR-	-0.52	0.12	3.59	0.05	-0.14	0

319/ACC+	4.06	2.22	8.8	2.29	-0.01	0.01
319/ACC-	-4.83	-1.9	1.77	-2.13	-0.2	0
353/ULS+	-0.43	-0.17	4.46	0.14	-0.02	0
353/ULS-	-1.69	-0.64	1.38	0.04	-0.07	0
353/SLS+	-0.43	-0.17	3.11	0.09	-0.02	0
353/SLS-	-1.17	-0.45	1.38	0.04	-0.05	0
353/SLS:CHR+	-0.43	-0.17	3.11	0.09	-0.02	0
353/SLS:CHR-	-1.17	-0.45	1.38	0.04	-0.05	0
353/SLS:FRE+	-0.43	-0.17	2.59	0.08	-0.02	0
353/SLS:FRE-	-0.95	-0.36	1.38	0.04	-0.04	0
353/SLS:QPR+	-0.43	-0.17	2.42	0.07	-0.02	0
353/SLS:QPR-	-0.87	-0.33	1.38	0.04	-0.04	0
353/ACC+	2.47	3.59	8.07	0.58	0.26	0.01
353/ACC-	-3.77	-4.1	-4.27	-0.47	-0.32	0
355/ULS+	-0.43	-0.14	4.31	0	-0.01	0
355/ULS-	-1.7	-0.48	1.33	-0.01	-0.02	0
355/SLS+	-0.43	-0.14	3.01	0	-0.01	0
355/SLS-	-1.17	-0.34	1.33	-0.01	-0.02	0
355/SLS:CHR+	-0.43	-0.14	3.01	0	-0.01	0
355/SLS:CHR-	-1.17	-0.34	1.33	-0.01	-0.02	0
355/SLS:FRE+	-0.43	-0.14	2.51	0	-0.01	0
355/SLS:FRE-	-0.95	-0.28	1.33	-0.01	-0.01	0
355/SLS:QPR+	-0.43	-0.14	2.34	0	-0.01	0
355/SLS:QPR-	-0.88	-0.26	1.33	-0.01	-0.01	0
355/ACC+	1.63	2.08	7.99	0	0.07	0.01
355/ACC-	-2.94	-2.47	-4.31	-0.01	-0.08	0
364/ULS+	0.26	0.71	2.18	-0.03	0.03	0
364/ULS-	0.07	0.2	0.66	-0.1	0.01	0
364/SLS+	0.18	0.5	1.52	-0.03	0.02	0
364/SLS-	0.07	0.2	0.66	-0.07	0.01	0
364/SLS:CHR+	0.18	0.5	1.52	-0.03	0.02	0
364/SLS:CHR-	0.07	0.2	0.66	-0.07	0.01	0
364/SLS:FRE+	0.15	0.41	1.26	-0.03	0.02	0
364/SLS:FRE-	0.07	0.2	0.66	-0.06	0.01	0
364/SLS:QPR+	0.13	0.38	1.17	-0.03	0.02	0
364/SLS:QPR-	0.07	0.2	0.66	-0.05	0.01	0
364/ACC+	1.7	1.09	1.99	0.21	0.48	0
364/ACC-	-1.5	-0.51	-0.16	-0.29	-0.46	0
366/ULS+	1.4	-0.01	4.23	0.01	0.05	0
366/ULS-	0.36	-0.04	1.28	0	0.01	0
366/SLS+	0.97	-0.01	2.95	0.01	0.03	0
366/SLS-	0.36	-0.03	1.28	0	0.01	0
366/SLS:CHR+	0.97	-0.01	2.95	0.01	0.03	0
366/SLS:CHR-	0.36	-0.03	1.28	0	0.01	0

366/SLS:FRE+	0.79	-0.01	2.45	0	0.03	0
366/SLS:FRE-	0.36	-0.03	1.28	0	0.01	0
366/SLS:QPR+	0.73	-0.01	2.28	0	0.02	0
366/SLS:QPR-	0.36	-0.02	1.28	0	0.01	0
366/ACC+	3.51	0.77	5.64	0.26	0.31	0
366/ACC-	-2.42	-0.81	-2.07	-0.25	-0.27	0
368/ULS+	1.28	-0.06	3.81	0.08	0.06	0
368/ULS-	0.33	-0.23	1.15	0.02	0.01	0
368/SLS+	0.89	-0.06	2.66	0.05	0.04	0
368/SLS-	0.33	-0.16	1.15	0.02	0.01	0
368/SLS:CHR+	0.89	-0.06	2.66	0.05	0.04	0
368/SLS:CHR-	0.33	-0.16	1.15	0.02	0.01	0
368/SLS:FRE+	0.72	-0.06	2.21	0.04	0.03	0
368/SLS:FRE-	0.33	-0.13	1.15	0.02	0.01	0
368/SLS:QPR+	0.66	-0.06	2.06	0.04	0.03	0
368/SLS:QPR-	0.33	-0.12	1.15	0.02	0.01	0
368/ACC+	3.73	2.4	5.2	0.71	0.3	0
368/ACC-	-2.73	-2.59	-1.99	-0.65	-0.26	0
376/ULS+	-0.07	0.71	2.18	-0.03	-0.01	0
376/ULS-	-0.26	0.2	0.65	-0.1	-0.03	0
376/SLS+	-0.07	0.49	1.52	-0.03	-0.01	0
376/SLS-	-0.18	0.2	0.65	-0.07	-0.02	0
376/SLS:CHR+	-0.07	0.49	1.52	-0.03	-0.01	0
376/SLS:CHR-	-0.18	0.2	0.65	-0.07	-0.02	0
376/SLS:FRE+	-0.07	0.41	1.26	-0.03	-0.01	0
376/SLS:FRE-	-0.14	0.2	0.65	-0.06	-0.02	0
376/SLS:QPR+	-0.07	0.38	1.17	-0.03	-0.01	0
376/SLS:QPR-	-0.13	0.2	0.65	-0.05	-0.02	0
376/ACC+	1.5	1.09	1.99	0.21	0.46	0
376/ACC-	-1.7	-0.51	-0.17	-0.29	-0.48	0
378/ULS+	-0.36	-0.01	4.23	0.01	-0.01	0
378/ULS-	-1.41	-0.04	1.28	0	-0.05	0
378/SLS+	-0.36	-0.01	2.95	0.01	-0.01	0
378/SLS-	-0.97	-0.03	1.28	0	-0.03	0
378/SLS:CHR+	-0.36	-0.01	2.95	0.01	-0.01	0
378/SLS:CHR-	-0.97	-0.03	1.28	0	-0.03	0
378/SLS:FRE+	-0.36	-0.01	2.45	0	-0.01	0
378/SLS:FRE-	-0.79	-0.03	1.28	0	-0.03	0
378/SLS:QPR+	-0.36	-0.01	2.28	0	-0.01	0
378/SLS:QPR-	-0.73	-0.02	1.28	0	-0.02	0
378/ACC+	2.42	0.77	5.63	0.26	0.27	0
378/ACC-	-3.51	-0.81	-2.08	-0.25	-0.31	0
380/ULS+	-0.33	-0.06	3.81	0.08	-0.01	0
380/ULS-	-1.28	-0.23	1.15	0.02	-0.05	0

380/SLS+	-0.33	-0.06	2.65	0.05	-0.01	0
380/SLS-	-0.89	-0.16	1.15	0.02	-0.04	0
380/SLS:CHR+	-0.33	-0.06	2.65	0.05	-0.01	0
380/SLS:CHR-	-0.89	-0.16	1.15	0.02	-0.04	0
380/SLS:FRE+	-0.33	-0.06	2.2	0.04	-0.01	0
380/SLS:FRE-	-0.72	-0.13	1.15	0.02	-0.03	0
380/SLS:QPR+	-0.33	-0.06	2.05	0.04	-0.01	0
380/SLS:QPR-	-0.67	-0.12	1.15	0.02	-0.03	0
380/ACC+	2.73	2.41	5.2	0.71	0.26	0
380/ACC-	-3.73	-2.59	-2	-0.65	-0.3	0
Case ULS+	ULS+					
Sum of val.	10.38	11.9	358.54	8.46	1.03	0.01
Sum of reac.	0	0	96.61	200.9	-443.46	0
Sum of forc.	0	0	-96.61	-200.9	443.46	0
Check val.	0	0	0	0	0	0
Precision	6.62E-11	3.85E-23				
Case ULS-	ULS-					
Sum of val.	-10.38	-11.9	96.61	0.82	-1.03	-0.01
Sum of reac.	0	0	96.61	200.9	-443.46	0
Sum of forc.	0	0	-96.61	-200.9	443.46	0
Check val.	0	0	0	0	0	0
Precision	6.62E-11	3.85E-23				
Case SLS+	SLS+					
Sum of val.	6.1	6.96	248.69	5.75	0.61	0.01
Sum of reac.	0	0	96.61	200.9	-443.46	0
Sum of forc.	0	0	-96.61	-200.9	443.46	0
Check val.	0	0	0	0	0	0
Precision	6.62E-11	3.85E-23				
Case SLS-	SLS-					
Sum of val.	-6.1	-6.96	96.61	1.28	-0.61	-0.01
Sum of reac.	0	0	96.61	200.9	-443.46	0
Sum of forc.	0	0	-96.61	-200.9	443.46	0
Check val.	0	0	0	0	0	0
Precision	6.62E-11	3.85E-23				
Case SLS:CHR+	SLS:CHR+					
Sum of val.	6.1	6.96	248.69	5.75	0.61	0.01
Sum of reac.	0	0	96.61	200.9	-443.46	0
Sum of forc.	0	0	-96.61	-200.9	443.46	0
Check val.	0	0	0	0	0	0

Precision	6.62E-11	3.85E-23				
Case SLS:CHR-	SLS:CHR-					
Sum of val.	-6.1	-6.96	96.61	1.28	-0.61	-0.01
Sum of reac.	0	0	96.61	200.9	-443.46	0
Sum of forc.	0	0	-96.61	-200.9	443.46	0
Check val.	0	0	0	0	0	0
Precision	6.62E-11	3.85E-23				
Case SLS:FRE+	SLS:FRE+					
Sum of val.	4.27	4.87	203.06	4.6	0.43	0
Sum of reac.	0	0	96.61	200.9	-443.46	0
Sum of forc.	0	0	-96.61	-200.9	443.46	0
Check val.	0	0	0	0	0	0
Precision	6.62E-11	3.85E-23				
Case SLS:FRE-	SLS:FRE-					
Sum of val.	-4.27	-4.87	96.61	1.47	-0.42	0
Sum of reac.	0	0	96.61	200.9	-443.46	0
Sum of forc.	0	0	-96.61	-200.9	443.46	0
Check val.	0	0	0	0	0	0
Precision	6.62E-11	3.85E-23				
Case SLS:QPR+	SLS:QPR+					
Sum of val.	3.66	4.18	187.86	4.22	0.36	0
Sum of reac.	0	0	96.61	200.9	-443.46	0
Sum of forc.	0	0	-96.61	-200.9	443.46	0
Check val.	0	0	0	0	0	0
Precision	6.62E-11	3.85E-23				
Case SLS:QPR-	SLS:QPR-					
Sum of val.	-3.66	-4.18	96.61	1.54	-0.36	0
Sum of reac.	0	0	96.61	200.9	-443.46	0
Sum of forc.	0	0	-96.61	-200.9	443.46	0
Check val.	0	0	0	0	0	0
Precision	6.62E-11	3.85E-23				
Case ACC+	ACC+					
Sum of val.	111.81	111.37	256.78	56.01	9.09	0.05
Sum of reac.	31.93	-106.45	96.61	321.45	-407.29	-554.83
Sum of forc.	-31.93	106.45	-96.61	-321.45	407.29	554.83
Check val.	0	0	0	0	0	0
Precision	-1.84E-10	-5.41E-21				

Case ACC-	ACC-					
Sum of val.	-111.81	-111.37	27.69	-50.25	-9.09	-0.05
Sum of reac.	31.93	-106.45	96.61	321.45	-407.29	-554.83
Sum of forc.	-31.93	106.45	-96.61	-321.45	407.29	554.83
Check val.	0	0	0	0	0	0
Precision	-1.84E-10	-5.41E-21				

ΕΛΕΓΧΟΣ ΜΕΛΩΝ

Member	Section	Material	Lay	Laz	Ratio	Case	Ratio(uy)	Case(uy)	Ratio(uz)	Case(uz)	Ratio(vx)	Case(vx)	Ratio(vy)	Case(vy)
1	CAE50x5	S 275	136.6	136.6	0.07	19 ACC /10/	-	-	-	-	-	-	-	-
2	CAE50x5	S 275	136.6	136.6	0.06	27 EX+0.3EY	-	-	-	-	-	-	-	-
3	CAE50x5	S 275	137.17	137.17	0.08	19 ACC /12/	-	-	-	-	-	-	-	-
4	CAE50x5	S 275	137.17	137.17	0.08	19 ACC /1/	-	-	-	-	-	-	-	-
5	CAE50x5	S 275	136.89	136.89	0.06	19 ACC /13/	-	-	-	-	-	-	-	-
6	CAE50x5	S 275	136.89	136.89	0.07	19 ACC /4/	-	-	-	-	-	-	-	-
7	CAE50x5	S 275	102.89	102.89	0.05	19 ACC /6/	-	-	-	-	-	-	-	-
8	TREC80x40x5	S235	34.52	61.25	0.2	4 ULS /1/	0	7 SLS /1/	0.01	7 SLS /1/	-	-	-	-
9	TREC80x40x5	S235	65.6	116.38	0.32	4 ULS /1/	0	7 SLS /1/	0.14	7 SLS /1/	-	-	-	-
10	TREC80x40x5	S235	65.96	117.03	0.31	4 ULS /1/	0	7 SLS /1/	0.09	7 SLS /1/	-	-	-	-
11	TREC80x40x5	S235	65.78	116.71	0.32	4 ULS /1/	0	7 SLS /1/	0.14	7 SLS /1/	-	-	-	-
12	TREC80x40x5	S235	34.52	61.25	0.2	4 ULS /1/	0	7 SLS /1/	0.02	7 SLS /1/	-	-	-	-
13	CAE50x5	S 275	102.89	102.89	0.06	19 ACC /16/	-	-	-	-	-	-	-	-
41	HE100A	S275	22.19	17.93	0.06	19 ACC /10/	-	-	-	-	0	7 SLS /1/	0	7 SLS /1/
42	HE100A	S275	39.46	31.87	0.07	4 ULS /1/	-	-	-	-	0	7 SLS /1/	0	7 SLS /1/
43	HE100A	S275	32.06	25.89	0.17	19 ACC /6/	-	-	-	-	0	7 SLS /1/	0.02	7 SLS /1/
44	HE100A	S275	49.32	39.84	0.13	19 ACC /16/	-	-	-	-	0	7 SLS /1/	0.02	7 SLS /1/
45	HE100A	S275	22.19	35.85	0.08	4 ULS /1/	0.01	7 SLS /1/	0.02	7 SLS /1/	-	-	-	-
46	HE100A	S275	22.19	35.85	0.08	4 ULS /1/	0.01	7 SLS /1/	0.02	7 SLS /1/	-	-	-	-
47	HE100A	S275	22.19	35.85	0.12	19 ACC /14/	0.01	7 SLS /1/	0.03	7 SLS /1/	-	-	-	-
53	HE100A	S275	49.32	39.84	0.12	19 ACC /6/	-	-	-	-	0	7 SLS /1/	0.02	7 SLS /1/
55	HE100A	S275	29.34	47.41	0.16	19 ACC /10/	0.01	7 SLS /1/	0.07	7 SLS /1/	-	-	-	-
61	HE100A	S275	22.19	17.93	0.08	19 ACC /14/	-	-	-	-	0	7 SLS /1/	0.01	7 SLS /1/
62	HE100A	S275	39.46	31.87	0.08	19 ACC /6/	-	-	-	-	0	7 SLS /1/	0.01	7 SLS /1/
63	HE100A	S275	32.06	25.89	0.27	19 ACC /6/	-	-	-	-	0	7 SLS /1/	0.03	7 SLS /1/
64	HE100A	S275	49.32	39.84	0.18	19 ACC /16/	-	-	-	-	0	7 SLS /1/	0.04	7 SLS /1/
65	HE100A	S275	22.19	35.85	0.09	4 ULS /1/	0	7 SLS /1/	0.03	7 SLS /1/	-	-	-	-

66	HE100A	S275	22.19	35.85	0.09	4 ULS /1/	0	7 SLS /1/	0.03	7 SLS /1/	-	-	-	-
67	HE100A	S275	22.19	35.85	0.16	19 ACC /8/	0	7 SLS /1/	0.04	7 SLS /1/	-	-	-	-
73	HE100A	S275	49.32	39.84	0.19	19 ACC /16/	-	-	-	-	0	7 SLS /1/	0.04	7 SLS /1/
75	HE100A	S275	29.34	47.41	0.17	4 ULS /1/	0	7 SLS /1/	0.09	7 SLS /1/	-	-	-	-
81	HE100A	S275	22.19	17.93	0.08	19 ACC /8/	-	-	-	-	0	7 SLS /1/	0.01	7 SLS /1/
82	HE100A	S275	39.46	31.87	0.08	19 ACC /16/	-	-	-	-	0	7 SLS /1/	0.01	7 SLS /1/
83	HE100A	S275	32.06	25.89	0.27	19 ACC /16/	-	-	-	-	0	7 SLS /1/	0.03	7 SLS /1/
84	HE100A	S275	49.32	39.84	0.18	19 ACC /6/	-	-	-	-	0	7 SLS /1/	0.04	7 SLS /1/
85	HE100A	S275	22.19	35.85	0.09	4 ULS /1/	0	7 SLS /1/	0.03	7 SLS /1/	-	-	-	-
86	HE100A	S275	22.19	35.85	0.09	4 ULS /1/	0	7 SLS /1/	0.03	7 SLS /1/	-	-	-	-
87	HE100A	S275	22.19	35.85	0.16	19 ACC /14/	0	7 SLS /1/	0.04	7 SLS /1/	-	-	-	-
93	HE100A	S275	49.32	39.84	0.19	19 ACC /6/	-	-	-	-	0	7 SLS /1/	0.04	7 SLS /1/
95	HE100A	S275	29.34	47.41	0.17	4 ULS /1/	0	7 SLS /1/	0.09	7 SLS /1/	-	-	-	-
200	TCAR80x5	S235	31.12	31.12	0.04	19 ACC /6/	0	7 SLS /1/	0	7 SLS /1/	-	-	-	-
201	TCAR80x5	S235	31.12	31.12	0.04	19 ACC /6/	0	7 SLS /1/	0.01	7 SLS /1/	-	-	-	-
211	TCAR80x5	S235	59.12	59.12	0.04	4 ULS /1/	0	7 SLS /1/	0.03	7 SLS /1/	-	-	-	-
212	TREC80x40x5	S235	65.6	116.38	0.22	4 ULS /1/	0	7 SLS /1/	0.09	7 SLS /1/	-	-	-	-
213	TCAR80x5	S235	59.12	59.12	0.04	4 ULS /1/	0	7 SLS /1/	0.03	7 SLS /1/	-	-	-	-
214	TREC80x40x5	S235	65.6	116.38	0.22	4 ULS /1/	0	7 SLS /1/	0.09	7 SLS /1/	-	-	-	-
215	TCAR80x5	S235	59.12	59.12	0.04	4 ULS /1/	0	7 SLS /1/	0.03	7 SLS /1/	-	-	-	-
216	TREC80x40x5	S235	65.6	116.38	0.22	4 ULS /1/	0	7 SLS /1/	0.09	7 SLS /1/	-	-	-	-
217	TCAR80x5	S235	59.12	59.12	0.05	4 ULS /1/	0	7 SLS /1/	0.04	7 SLS /1/	-	-	-	-
218	TCAR80x5	S235	59.12	59.12	0.09	4 ULS /1/	0	7 SLS /1/	0.06	7 SLS /1/	-	-	-	-
228	TCAR80x5	S235	59.45	59.45	0.04	4 ULS /1/	0	7 SLS /1/	0.02	7 SLS /1/	-	-	-	-
229	TREC80x40x5	S235	65.96	117.03	0.21	4 ULS /1/	0	7 SLS /1/	0.06	7 SLS /1/	-	-	-	-
230	TCAR80x5	S235	59.45	59.45	0.04	4 ULS /1/	0	7 SLS /1/	0.02	7 SLS /1/	-	-	-	-
231	TREC80x40x5	S235	65.96	117.03	0.21	4 ULS /1/	0	7 SLS /1/	0.06	7 SLS /1/	-	-	-	-
232	TCAR80x5	S235	59.45	59.45	0.04	4 ULS /1/	0	7 SLS /1/	0.02	7 SLS /1/	-	-	-	-
233	TREC80x40x5	S235	65.96	117.03	0.21	4 ULS /1/	0	7 SLS /1/	0.06	7 SLS /1/	-	-	-	-

234	TCAR80x5	S235	59.45	59.45	0.05	4 ULS /1/	0	7 SLS /1/	0.03	7 SLS /1/	-	-	-	-
235	TCAR80x5	S235	59.45	59.45	0.08	4 ULS /1/	0	7 SLS /1/	0.05	7 SLS /1/	-	-	-	-
292	CAE50x5	S 275	91.3	91.3	0.06	19 ACC /12/	-	-	-	-	-	-	-	-
293	CAE50x5	S 275	91.3	91.3	0.04	19 ACC /13/	-	-	-	-	-	-	-	-
294	CAE50x5	S 275	136.6	136.6	0.07	19 ACC /12/	-	-	-	-	-	-	-	-
295	CAE50x5	S 275	136.6	136.6	0.07	19 ACC /4/	-	-	-	-	-	-	-	-
297	CAE50x5	S 275	137.17	137.17	0.08	19 ACC /12/	-	-	-	-	-	-	-	-
298	CAE50x5	S 275	137.17	137.17	0.08	19 ACC /1/	-	-	-	-	-	-	-	-
311	CAE50x5	S 275	130.69	130.69	0.05	19 ACC /10/	-	-	-	-	-	-	-	-
312	CAE50x5	S 275	130.69	130.69	0.04	19 ACC /1/	-	-	-	-	-	-	-	-
313	CAE50x5	S 275	131.3	131.3	0.05	19 ACC /12/	-	-	-	-	-	-	-	-
314	CAE50x5	S 275	131.3	131.3	0.05	19 ACC /1/	-	-	-	-	-	-	-	-
319	CAE50x5	S 275	127	127	0.04	19 ACC /10/	-	-	-	-	-	-	-	-
320	CAE50x5	S 275	127	127	0.03	19 ACC /1/	-	-	-	-	-	-	-	-
321	CAE50x5	S 275	127.62	127.62	0.04	19 ACC /12/	-	-	-	-	-	-	-	-
322	CAE50x5	S 275	127.62	127.62	0.04	19 ACC /1/	-	-	-	-	-	-	-	-
413	HE100A	S275	22.19	17.93	0.06	19 ACC /4/	-	-	-	-	0	7 SLS /1/	0	7 SLS /1/
414	HE100A	S275	39.46	31.87	0.07	4 ULS /1/	-	-	-	-	0	7 SLS /1/	0	7 SLS /1/
415	HE100A	S275	32.06	25.89	0.17	19 ACC /16/	-	-	-	-	0	7 SLS /1/	0.02	7 SLS /1/
416	HE100A	S275	49.32	39.84	0.13	19 ACC /6/	-	-	-	-	0	7 SLS /1/	0.02	7 SLS /1/
417	HE100A	S275	22.19	35.85	0.08	4 ULS /1/	0.01	7 SLS /1/	0.02	7 SLS /1/	-	-	-	-
418	HE100A	S275	22.19	35.85	0.08	4 ULS /1/	0.01	7 SLS /1/	0.02	7 SLS /1/	-	-	-	-
419	HE100A	S275	22.19	35.85	0.12	19 ACC /8/	0.01	7 SLS /1/	0.03	7 SLS /1/	-	-	-	-
421	HE100A	S275	49.32	39.84	0.12	19 ACC /16/	-	-	-	-	0	7 SLS /1/	0.02	7 SLS /1/
423	HE100A	S275	29.34	47.41	0.16	19 ACC /4/	0.01	7 SLS /1/	0.07	7 SLS /1/	-	-	-	-
430	TCAR80x5	S235	59.12	59.12	0.04	4 ULS /1/	0	7 SLS /1/	0.04	7 SLS /1/	-	-	-	-
431	TCAR80x5	S235	59.45	59.45	0.03	19 ACC /8/	0	1*2	0.01	7 SLS /1/	-	-	-	-
465	TCAR80x5	S235	59.28	59.28	0.04	4 ULS /1/	0	7 SLS /1/	0.03	7 SLS /1/	-	-	-	-
466	TREC80x40x5	S235	65.78	116.71	0.22	4 ULS /1/	0	7 SLS /1/	0.09	7 SLS /1/	-	-	-	-

469	TCAR80x5	S235	59.28	59.28	0.04	4 ULS /1/	0	7 SLS /1/	0.03	7 SLS /1/	-	-	-	-
470	CAE50x5	S 275	131	131	0.04	19 ACC /12/	-	-	-	-	-	-	-	-
471	CAE50x5	S 275	131	131	0.05	19 ACC /4/	-	-	-	-	-	-	-	-
472	TREC80x40x5	S235	65.78	116.71	0.22	4 ULS /1/	0	7 SLS /1/	0.09	7 SLS /1/	-	-	-	-
473	TCAR80x5	S235	59.28	59.28	0.04	4 ULS /1/	0	7 SLS /1/	0.03	7 SLS /1/	-	-	-	-
474	CAE50x5	S 275	127.31	127.31	0.03	19 ACC /12/	-	-	-	-	-	-	-	-
475	CAE50x5	S 275	127.31	127.31	0.04	19 ACC /4/	-	-	-	-	-	-	-	-
476	TREC80x40x5	S235	65.78	116.71	0.22	4 ULS /1/	0	7 SLS /1/	0.09	7 SLS /1/	-	-	-	-
477	CAE50x5	S 275	136.89	136.89	0.07	19 ACC /10/	-	-	-	-	-	-	-	-
478	CAE50x5	S 275	136.89	136.89	0.07	19 ACC /1/	-	-	-	-	-	-	-	-
479	TCAR80x5	S235	59.28	59.28	0.05	4 ULS /1/	0	7 SLS /1/	0.04	7 SLS /1/	-	-	-	-
480	TCAR80x5	S235	59.28	59.28	0.09	4 ULS /1/	0	7 SLS /1/	0.06	7 SLS /1/	-	-	-	-
481	TCAR80x5	S235	59.28	59.28	0.04	4 ULS /1/	0	7 SLS /1/	0.04	7 SLS /1/	-	-	-	-
484	HE100A	S275	8.63	13.94	0.04	19 ACC /6/	0	7 SLS /1/	0	7 SLS /1/	-	-	-	-
485	CAE50x5	S 275	91.3	91.3	0.04	19 ACC /1/	-	-	-	-	-	-	-	-
486	CAE50x5	S 275	91.3	91.3	0.05	19 ACC /10/	-	-	-	-	-	-	-	-
487	HE100A	S275	49.32	39.84	0.04	19 ACC /6/	-	-	-	-	0	7 SLS /1/	0	7 SLS /1/
488	HE100A	S275	49.32	39.84	0.02	19 ACC /6/	-	-	-	-	0	7 SLS /1/	0	7 SLS /1/
489	HE100A	S275	29.34	47.41	0.09	19 ACC /1/	0.01	7 SLS /1/	0.01	7 SLS /1/	-	-	-	-
490	TCAR80x5	S235	31.12	31.12	0.04	19 ACC /16/	0	7 SLS /1/	0.01	7 SLS /1/	-	-	-	-
491	TCAR80x5	S235	31.12	31.12	0.04	19 ACC /16/	0	7 SLS /1/	0	7 SLS /1/	-	-	-	-
492	CAE50x5	S 275	102.89	102.89	0.05	30 0.3EX-EY	-	-	-	-	-	-	-	-
494	CAE50x5	S 275	102.89	102.89	0.06	19 ACC /6/	-	-	-	-	-	-	-	-
495	HE100A	S275	8.63	13.94	0.04	19 ACC /1/	0	7 SLS /1/	0	7 SLS /1/	-	-	-	-
496	HE100A	S275	8.63	13.94	0.04	19 ACC /12/	0	7 SLS /1/	0	7 SLS /1/	-	-	-	-
497	HE100A	S275	8.63	13.94	0.04	19 ACC /16/	0	7 SLS /1/	0	7 SLS /1/	-	-	-	-
498	CAE50x5	S 275	91.3	91.3	0.05	27 EX+0.3EY	-	-	-	-	-	-	-	-
499	CAE50x5	S 275	91.3	91.3	0.06	19 ACC /1/	-	-	-	-	-	-	-	-
500	CAE50x5	S 275	91.3	91.3	0.04	19 ACC /12/	-	-	-	-	-	-	-	-

501	CAE50x5	S 275	91.3	91.3	0.05	19 ACC /4/	-	-	-	-	-	-	-	-
505	TRON60x5	S235	25.21	25.21	0.04	4 ULS /1/	-	-	-	-	-	-	-	-
506	TRON60x5	S235	25.21	25.21	0.04	4 ULS /1/	-	-	-	-	-	-	-	-
507	TRON60x5	S235	25.21	25.21	0.04	4 ULS /1/	-	-	-	-	-	-	-	-
508	TRON60x5	S235	25.21	25.21	0.04	4 ULS /1/	-	-	-	-	-	-	-	-
515	HE100A	S275	22.19	17.93	0.04	19 ACC /10/	-	-	-	-	0	7 SLS /1/	0	7 SLS /1/
516	HE100A	S275	39.46	31.87	0.03	19 ACC /12/	-	-	-	-	0	7 SLS /1/	0	7 SLS /1/
517	HE100A	S275	32.06	25.89	0.03	19 ACC /12/	-	-	-	-	0	7 SLS /1/	0	7 SLS /1/
518	HE100A	S275	49.32	39.84	0.04	19 ACC /16/	-	-	-	-	0	7 SLS /1/	0	7 SLS /1/
519	HE100A	S275	22.19	35.85	0.03	19 ACC /12/	0	7 SLS /1/	0	7 SLS /1/	-	-	-	-
520	HE100A	S275	22.19	35.85	0.03	19 ACC /12/	0	7 SLS /1/	0	7 SLS /1/	-	-	-	-
521	HE100A	S275	22.19	35.85	0.05	19 ACC /6/	0	7 SLS /1/	0.01	7 SLS /1/	-	-	-	-
522	HE100A	S275	22.19	17.93	0.04	19 ACC /4/	-	-	-	-	0	7 SLS /1/	0	7 SLS /1/
523	HE100A	S275	39.46	31.87	0.03	19 ACC /1/	-	-	-	-	0	7 SLS /1/	0	7 SLS /1/
524	HE100A	S275	32.06	25.89	0.03	19 ACC /1/	-	-	-	-	0	7 SLS /1/	0	7 SLS /1/
525	HE100A	S275	22.19	35.85	0.03	19 ACC /1/	0	7 SLS /1/	0	7 SLS /1/	-	-	-	-
526	HE100A	S275	22.19	35.85	0.03	19 ACC /1/	0	7 SLS /1/	0	7 SLS /1/	-	-	-	-
527	HE100A	S275	22.19	35.85	0.05	19 ACC /16/	0	7 SLS /1/	0.01	7 SLS /1/	-	-	-	-
528	TCAR80x5	S235	31.12	31.12	0.03	19 ACC /6/	0	7 SLS /1/	0	7 SLS /1/	-	-	-	-
529	TCAR80x5	S235	31.12	31.12	0.02	4 ULS /1/	0	7 SLS /1/	0	7 SLS /1/	-	-	-	-
530	TCAR80x5	S235	31.12	31.12	0.02	19 ACC /1/	0	7 SLS /1/	0	7 SLS /1/	-	-	-	-
531	TCAR80x5	S235	31.12	31.12	0.02	19 ACC /12/	0	7 SLS /1/	0	7 SLS /1/	-	-	-	-
532	TCAR80x5	S235	31.12	31.12	0.02	4 ULS /1/	0	7 SLS /1/	0	7 SLS /1/	-	-	-	-
533	TCAR80x5	S235	31.12	31.12	0.03	19 ACC /16/	0	7 SLS /1/	0	7 SLS /1/	-	-	-	-
535	HE100A	S275	29.34	47.41	0.09	19 ACC /12/	0.01	7 SLS /1/	0.01	7 SLS /1/	-	-	-	-
536	TREC80x40x5	S235	34.52	61.25	0.13	4 ULS /1/	0	7 SLS /1/	0.01	7 SLS /1/	-	-	-	-
537	TREC80x40x5	S235	34.52	61.25	0.13	4 ULS /1/	0	7 SLS /1/	0.01	7 SLS /1/	-	-	-	-
538	TREC80x40x5	S235	34.52	61.25	0.13	4 ULS /1/	0	7 SLS /1/	0.01	7 SLS /1/	-	-	-	-
539	TREC80x40x5	S235	34.52	61.25	0.13	4 ULS /1/	0	7 SLS /1/	0.01	7 SLS /1/	-	-	-	-

540	TREC80x40x5	S235	34.52	61.25	0.13	4 ULS /1/	0	7 SLS /1/	0.01	7 SLS /1/	-	-	-	-
541	TREC80x40x5	S235	34.52	61.25	0.13	4 ULS /1/	0	7 SLS /1/	0.01	7 SLS /1/	-	-	-	-
542	CAE50x5	S 275	82.21	82.21	0.04	19 ACC /10/	-	-	-	-	-	-	-	-
543	CAE50x5	S 275	82.21	82.21	0.03	19 ACC /11/	-	-	-	-	-	-	-	-
544	CAE50x5	S 275	82.21	82.21	0.03	28 EX-0.3EY	-	-	-	-	-	-	-	-
545	CAE50x5	S 275	82.21	82.21	0.04	19 ACC /4/	-	-	-	-	-	-	-	-
546	CAE50x5	S 275	76.2	76.2	0.03	19 ACC /4/	-	-	-	-	-	-	-	-
547	CAE50x5	S 275	76.2	76.2	0.03	28 EX-0.3EY	-	-	-	-	-	-	-	-
548	CAE50x5	S 275	76.2	76.2	0.03	19 ACC /11/	-	-	-	-	-	-	-	-
549	CAE50x5	S 275	76.2	76.2	0.03	27 EX+0.3EY	-	-	-	-	-	-	-	-
550	HE100A	S275	49.32	39.84	0.02	19 ACC /16/	-	-	-	-	0	7 SLS /1/	0	7 SLS /1/
551	TCAR80x5	S235	31.12	31.12	0.03	4 ULS /1/	0	7 SLS /1/	0.01	7 SLS /1/	-	-	-	-
552	TCAR80x5	S235	59.12	59.12	0.04	19 ACC /14/	0	7 SLS /1/	0.04	7 SLS /1/	-	-	-	-
553	TCAR80x5	S235	59.45	59.45	0.03	19 ACC /8/	0	7 SLS /1/	0.02	7 SLS /1/	-	-	-	-
554	TCAR80x5	S235	59.28	59.28	0.04	19 ACC /8/	0	7 SLS /1/	0.04	7 SLS /1/	-	-	-	-
555	TCAR80x5	S235	31.12	31.12	0.03	4 ULS /1/	0	7 SLS /1/	0.01	7 SLS /1/	-	-	-	-
556	TCAR80x5	S235	31.12	31.12	0.03	4 ULS /1/	0	7 SLS /1/	0	7 SLS /1/	-	-	-	-
557	TCAR80x5	S235	59.12	59.12	0.05	4 ULS /1/	0	7 SLS /1/	0.04	7 SLS /1/	-	-	-	-
558	TCAR80x5	S235	59.45	59.45	0.04	4 ULS /1/	0	7 SLS /1/	0.03	7 SLS /1/	-	-	-	-
559	TCAR80x5	S235	59.28	59.28	0.05	4 ULS /1/	0	7 SLS /1/	0.04	7 SLS /1/	-	-	-	-
560	TCAR80x5	S235	31.12	31.12	0.03	4 ULS /1/	0	7 SLS /1/	0	7 SLS /1/	-	-	-	-
561	TCAR80x5	S235	31.12	31.12	0.03	19 ACC /8/	0	7 SLS /1/	0.01	7 SLS /1/	-	-	-	-
562	TCAR80x5	S235	59.12	59.12	0.04	19 ACC /14/	0	7 SLS /1/	0.04	7 SLS /1/	-	-	-	-
563	TCAR80x5	S235	59.45	59.45	0.03	19 ACC /8/	0	7 SLS /1/	0.02	7 SLS /1/	-	-	-	-
564	TCAR80x5	S235	59.28	59.28	0.04	19 ACC /8/	0	7 SLS /1/	0.04	7 SLS /1/	-	-	-	-
565	TCAR80x5	S235	31.12	31.12	0.03	19 ACC /14/	0	7 SLS /1/	0.01	7 SLS /1/	-	-	-	-

ΤΥΠΙΚΗ ΕΔΡΑΣΗ ΥΠΟΣΤΥΛΩΜΑΤΩΝ HEA100

www.hilti.com — **Profis Anchor 2.8.5**

Company:		Page:	1
Specifier:		Project:	
Address:		Sub-Project I Pos. No.:	
Phone I Fax:	|	Date:	15/11/2019
E-Mail:			

Specifier's comments:

1 Input data



Anchor type and diameter:	**HIT-HY 200 + HIT-V (8.8) M16**
Seismic/Filling set or any suitable annular gap filling solution	
Effective embedment depth:	$h_{ef,act}$ = 150 mm ($h_{ef,limit}$ = - mm)
Material:	8.8
Evaluation Service Report:	ETA 11/0493
Issued I Valid:	8/7/2019 | -
Proof:	SOFA design method + fib (07/2011) - after ETAG BOND testing
Stand-off installation:	without clamping (anchor); restraint level (anchor plate): 2.00; e_b = 30 mm; t = 15 mm
	Hilti Grout: , multipurpose, $f_{c,Grout}$ = 30.00 N/mm^2
Anchor plate:	l_x x l_y x t = 210 mm x 210 mm x 15 mm; (Recommended plate thickness: not calculated
Profile:	IPBi/HEA, IPBI 100 / HE 100 A; (L x W x T x FT) = 96 mm x 100 mm x 5 mm x 8 mm
Base material:	cracked concrete, C25/30, $f_{c,cyl}$ = 25.00 N/mm^2; h = 250 mm, Temp. short/long: 40/24 °C
Installation:	**hammer drilled hole, Installation condition: Dry**
Reinforcement:	no reinforcement or reinforcement spacing >= 150 mm (any Ø) or >= 100 mm (Ø <= 10 mm)
	no longitudinal edge reinforcement
	Reinforcement to control splitting according to fib (07/2011), 16.1.5 present

R - The anchor calculation is based on a rigid anchor plate assumption.

Geometry [mm] & Loading [kN, kNm]

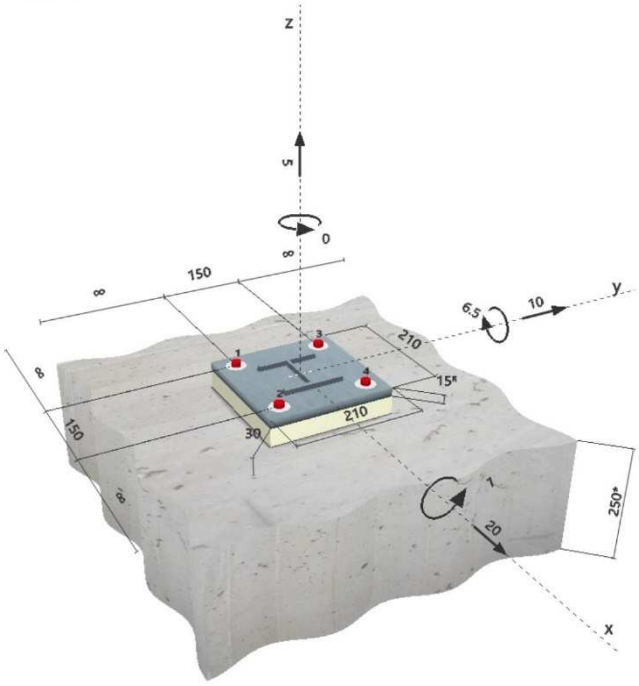

Input data and results must be checked for agreement with the existing conditions and for plausibility!
PROFIS Anchor (c) 2003-2009 Hilti AG, FL-9494 Schaan Hilti is a registered Trademark of Hilti AG, Schaan

1.1 Load combination

Case	Description	Forces [kN] / Moments [kNm]	Seismic	Fire	Max. Util. [%]
1	Combination 3	V_x = 20.000; V_y = 10.000; N = -25.000; M_x = 1.000; M_y = 6.500; M_z = 0.000;	no	no	74
2	**Combination 2**	**V_x = 20.000; V_y = 10.000; N = 5.000; M_x = 1.000; M_y = 6.500; M_z = 0.000;**	**no**	**no**	**83**

2 Load case/Resulting anchor forces

Load case: Design loads

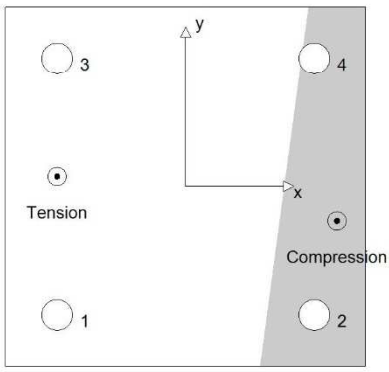

Anchor reactions [kN]
Tension force: (+Tension, -Compression)

Anchor	Tension force	Shear force	Shear force x	Shear force y
1	19.642	5.590	5.000	2.500
2	0.000	5.590	5.000	2.500
3	22.880	5.590	5.000	2.500
4	0.000	5.590	5.000	2.500

max. concrete compressive strain: 0.32 [‰]
max. concrete compressive stress: 9.46 [N/mm²]
resulting tension force in (x/y)=(-75/6): 42.522 [kN]
resulting compression force in (x/y)=(88/-20): 37.522 [kN]

Anchor forces are calculated based on the assumption of a rigid anchor plate.

3 Tension load SOFA (fib (07/2011), section 16.2.1)

	Load [kN]	Capacity [kN]	Utilization β_N [%]	Status
Steel Strength*	22.880	83.733	28	OK
Combined pullout-concrete cone failure**	42.522	57.786	74	OK
Concrete Breakout Strength**	42.522	61.314	70	OK
Splitting failure**	N/A	N/A	N/A	N/A

* anchor having the highest loading **anchor group (anchors in tension)

3.1 Steel Strength

$N_{Rk,s}$ [kN]	$\gamma_{M,s}$	$N_{Rd,s}$ [kN]	N_{Sd} [kN]
125.600	1.500	83.733	22.880

3.2 Combined pullout-concrete cone failure

$A_{p,N}$ [mm²]	$A^0_{p,N}$ [mm²]	$\psi_{A,Np}$	$\tau_{Rk,ucr,25}$ [N/mm²]	$s_{cr,Np}$ [mm]	$c_{cr,Np}$ [mm]	c_{min} [mm]
270,000	202,500	1.333	18.00	450	225	∞

ψ_c	$\tau_{Rk,cr}$ [N/mm²]	max $\tau_{Rk,cr}$ [N/mm²]	$\psi^0_{g,Np}$	$\psi_{g,Np}$
1.020	8.67	9.38	1.046	1.019

$e_{c1,N}$ [mm]	$\psi_{ec1,Np}$	$e_{c2,N}$ [mm]	$\psi_{ec2,Np}$	$\psi_{s,Np}$	$\psi_{re,Np}$
0	1.000	6	0.975	1.000	1.000

$N^0_{Rk,p}$ [kN]	$N_{Rk,p}$ [kN]	$\gamma_{M,p}$	$N_{Rd,p}$ [kN]	N_{Sd} [kN]
65.387	86.679	1.500	57.786	42.522

Input data and results must be checked for agreement with the existing conditions and for plausibility!
PROFIS Anchor (c) 2003-2009 Hilti AG, FL-9494 Schaan Hilti is a registered Trademark of Hilti AG, Schaan

3.3 Concrete Breakout Strength

$A_{c,N}$ [mm²]	$A^0_{c,N}$ [mm²]	$\psi_{A,N}$	$c_{cr,N}$ [mm]	$s_{cr,N}$ [mm]	
270,000	202,500	1.333	225	450	
$e_{c1,N}$ [mm]	$\psi_{ec1,N}$	$e_{c2,N}$ [mm]	$\psi_{ec2,N}$	$\psi_{s,N}$	$\psi_{re,N}$
0	1.000	6	0.975	1.000	1.000
k_1	$N^0_{Rk,c}$ [kN]	$\gamma_{M,c}$	$N_{Rd,c}$ [kN]	N_{Sd} [kN]	
7.700	70.729	1.500	61.314	42.522	

Input data and results must be checked for agreement with the existing conditions and for plausibility!
PROFIS Anchor (c) 2003-2009 Hilti AG, FL-9494 Schaan Hilti is a registered Trademark of Hilti AG, Schaan

4 Shear load SOFA (fib (07/2011), section 16.2.2)

	Load [kN]	Capacity [kN]	Utilization β_V [%]	Status
Steel Strength (without lever arm)*	5.590	50.240	12	OK
Steel failure (with lever arm)*	5.590	6.808	83	OK
Pryout Strength**	22.361	162.271	14	OK
Concrete edge failure in direction **	N/A	N/A	N/A	N/A

* anchor having the highest loading **anchor group (relevant anchors)

4.1 Steel Strength (without lever arm)

$V_{Rk,s}$ [kN]	$\gamma_{M,s}$	$V_{Rd,s}$ [kN]	V_{Sd} [kN]
62.800	1.250	50.240	5.590

4.2 Steel failure (with lever arm)

l [mm]	α_M		
46	2.00		
N_{Sd} / $N_{Rd,s}$	1 - N_{Sd} / $N_{Rd,s}$	$M^0_{Rk,s}$ [kNm]	$M_{Rk,s} = M^0_{Rk,s}$ (1 - $N_{Sd}/N_{Rd,s}$) [kNm]
0.273	0.727	0.266	0.194
$V^M_{Rk,s} = \alpha_M * M_{Rk,s}$ / l [kN]		$\gamma_{Ms,b,V}$	$V^M_{Rd,s}$ [kN]	V_{Sd} [kN]
8.510		1.250	6.808	5.590

4.3 Pryout Strength (Bond Strength controls)

$A_{p,N}$ [mm²]	$A^0_{p,N}$ [mm²]	$\psi_{A,Np}$	$\tau_{Rk,ucr,25}$ [N/mm²]	$c_{cr,Np}$ [mm]	$s_{cr,Np}$ [mm]	c_{min} [mm]
360,000	202,500	1.778	18.00	225	450	∞
ψ_c	$\tau_{Rk,cr}$ [N/mm²]	max $\tau_{Rk,cr}$ [N/mm²]	k_4	$\psi^0_{g,Np}$	$\psi_{g,Np}$	
1.020	8.67	9.38	2.000	1.111	1.047	
$e_{c1,V}$ [mm]	$\psi_{ec1,Np}$	$e_{c2,V}$ [mm]	$\psi_{ec2,Np}$	$\psi_{s,Np}$	$\psi_{re,Np}$	
0	1.000	0	1.000	1.000	1.000	
$N^0_{Rk,p}$ [kN]	$N_{Rk,p}$ [kN]	$\gamma_{M,c,p}$	$V_{Rd,cp}$ [kN]	V_{Sd} [kN]		
65.387	121.703	1.500	162.271	22.361		

5 Combined tension and shear loads SOFA (fib (07/2011), section 10.3)

	β_N	β_V	α	Utilization $\beta_{N,V}$ [%]	Status
Steel without lever arm	0.273	0.111	2.000	9	OK
Steel with lever arm	0.224	0.597	1.000	83	OK
concrete	0.736	0.138	1.500	69	OK

$\beta_N^\alpha + \beta_V^\alpha <= 1$

Input data and results must be checked for agreement with the existing conditions and for plausibility!
PROFIS Anchor (c) 2003-2009 Hilti AG, FL-9494 Schaan Hilti is a registered Trademark of Hilti AG, Schaan

Company:
Specifier:
Address:
Phone I Fax: |
E-Mail:

6 Displacements (highest loaded anchor)

Short term loading:

N_{Sk}	=	16.948 [kN]	δ_N	=	0.157 [mm]
V_{Sk}	=	4.141 [kN]	δ_V	=	0.166 [mm]
			δ_{NV}	=	0.228 [mm]

Long term loading:

N_{Sk}	=	16.948 [kN]	δ_N	=	0.360 [mm]
V_{Sk}	=	4.141 [kN]	δ_V	=	0.248 [mm]
			δ_{NV}	=	0.437 [mm]

Comments: Tension displacements are valid with half of the required installation torque moment for uncracked concrete! Shear displacements are valid without friction between the concrete and the anchor plate! The gap due to the drilled hole and clearance hole tolerances are not included in this calculation!

The acceptable anchor displacements depend on the fastened construction and must be defined by the designer!

7 Warnings

- The anchor design methods in PROFIS Anchor require rigid anchor plates per current regulations (ETAG 001/Annex C, EOTA TR029, etc.). This means load re-distribution on the anchors due to elastic deformations of the anchor plate are not considered - the anchor plate is assumed to be sufficiently stiff, in order not to be deformed when subjected to the design loading. PROFIS Anchor calculates the minimum required anchor plate thickness with FEM to limit the stress of the anchor plate based on the assumptions explained above. The proof if the rigid anchor plate assumption is valid is not carried out by PROFIS Anchor. Input data and results must be checked for agreement with the existing conditions and for plausibility!
- The accessory list in this report is for the information of the user only. In any case, the instructions for use provided with the product have to be followed to ensure a proper installation.
- Bore hole cleaning must be performed according to instructions for use (blow twice with oil-free compressed air (min. 6 bar), brush twice, blow twice with oil-free compressed air (min. 6 bar)).
- Characteristic bond resistances depend on short- and long-term temperatures.
- Please contact Hilti to check feasibility of HIT-V rod supply.
- The design method fib (07/2011) assumes that no hole clearance between the anchors and the fixture is present. This can be achieved by filling the gap with mortar of sufficient compressive strength (e.g. by using the HILTI Seismic/Filling set) or by other suitable means
- The compliance with current standards (e.g. EC3) is the responsibility of the user
- Checking the transfer of loads into the base material is required in accordance with fib (07/2011)!

Fastening meets the design criteria!

Input data and results must be checked for agreement with the existing conditions and for plausibility!
PROFIS Anchor (c) 2003-2009 Hilti AG, FL-9494 Schaan Hilti is a registered Trademark of Hilti AG, Schaan

Company:
Specifier:
Address:
Phone I Fax: |
E-Mail:

8 Installation data

Anchor plate, steel: -
Profile: IPBi/HEA, IPBI 100 / HE 100 A; (L x W x T x FT) = 96 mm x 100 mm x 5 mm x 8 mm
Hole diameter in the fixture: d_f = 18 mm
Plate thickness (input): 15 mm
Recommended plate thickness: not calculated
Drilling method: Hammer drilled
Cleaning: Compressed air cleaning of the drilled hole according to instructions for use is required

Anchor type and diameter: HIT-HY 200 + HIT-V (8.8) M16
Installation torque: 0.080 kNm

Hole diameter in the base material: 18 mm
Hole depth in the base material: 150 mm
Minimum thickness of the base material: 186 mm

8.1 Recommended accessories

Drilling	Cleaning	Setting
• Suitable Rotary Hammer • Properly sized drill bit	• Compressed air with required accessories to blow from the bottom of the hole • Proper diameter wire brush	• Dispenser including cassette and mixer • Seismic/Filling set • Torque wrench

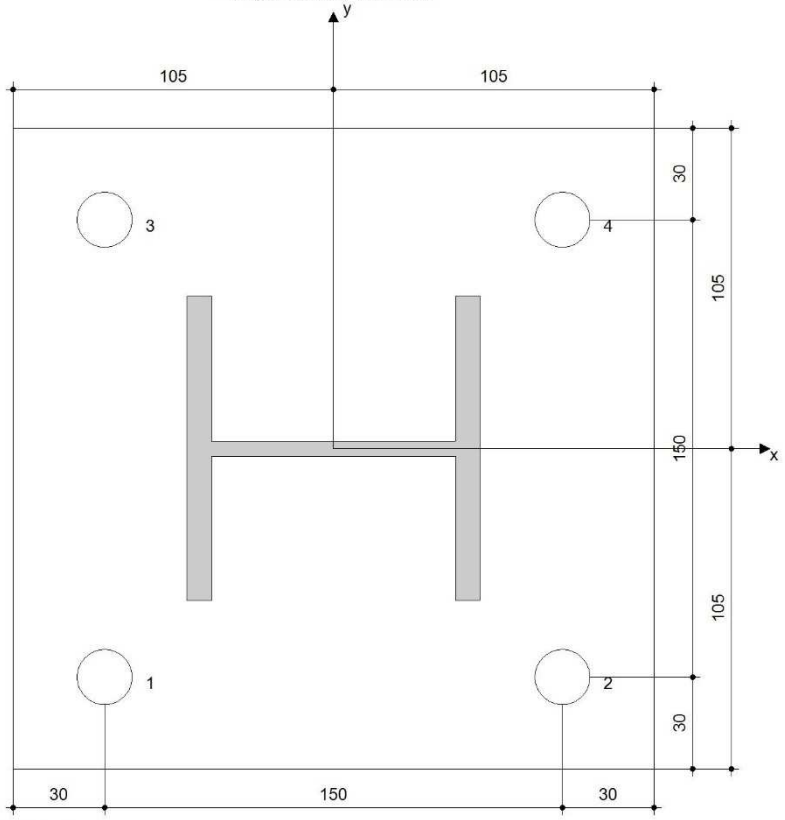

Coordinates Anchor [mm]

Anchor	x	y	c_{-x}	c_{+x}	c_{-y}	c_{+y}
1	-75	-75	-	-	-	-
2	75	-75	-	-	-	-
3	-75	75	-	-	-	-
4	75	75	-	-	-	-

Input data and results must be checked for agreement with the existing conditions and for plausibility!
PROFIS Anchor (c) 2003-2009 Hilti AG, FL-9494 Schaan Hilti is a registered Trademark of Hilti AG, Schaan

9 Remarks; Your Cooperation Duties

- Any and all information and data contained in the Software concern solely the use of Hilti products and are based on the principles, formulas and security regulations in accordance with Hilti's technical directions and operating, mounting and assembly instructions, etc., that must be strictly complied with by the user. All figures contained therein are average figures, and therefore use-specific tests are to be conducted prior to using the relevant Hilti product. The results of the calculations carried out by means of the Software are based essentially on the data you put in. Therefore, you bear the sole responsibility for the absence of errors, the completeness and the relevance of the data to be put in by you. Moreover, you bear sole responsibility for having the results of the calculation checked and cleared by an expert, particularly with regard to compliance with applicable norms and permits, prior to using them for your specific facility. The Software serves only as an aid to interpret norms and permits without any guarantee as to the absence of errors, the correctness and the relevance of the results or suitability for a specific application.
- You must take all necessary and reasonable steps to prevent or limit damage caused by the Software. In particular, you must arrange for the regular backup of programs and data and, if applicable, carry out the updates of the Software offered by Hilti on a regular basis. If you do not use the AutoUpdate function of the Software, you must ensure that you are using the current and thus up-to-date version of the Software in each case by carrying out manual updates via the Hilti Website. Hilti will not be liable for consequences, such as the recovery of lost or damaged data or programs, arising from a culpable breach of duty by you.

Input data and results must be checked for agreement with the existing conditions and for plausibility!
PROFIS Anchor (c) 2003-2009 Hilti AG, FL-9494 Schaan Hilti is a registered Trademark of Hilti AG, Schaan

ΣΥΝΔΕΣΗ ΚΑΤΑΚΟΡΥΦΩΝ ΣΥΝΔΕΣΜΩΝ ΔΥΣΚΑΜΨΙΑΣ

Autodesk Robot Structural Analysis Professional 2019

Calculations of the connection with the gusset plate

EN 1993-1-8:2005/AC:2009

OK

Ratio **0.54**

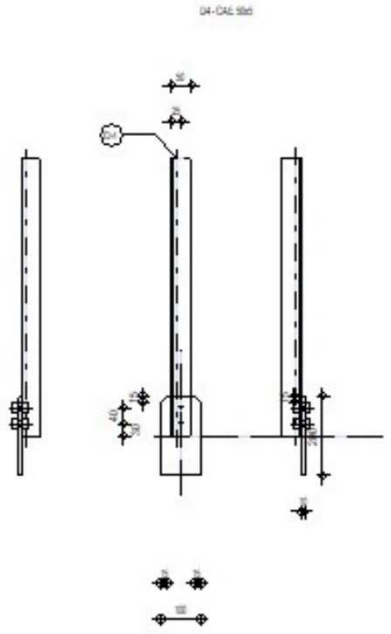

GENERAL

Connection no.: 25
Connection name: L50/5 with 2 bolts

GEOMETRY

BARS

		Bar 4					
Section:		CAE 50x5					
	h	50					mm
	b_f	50					mm
	t_w	5					mm
	t_f	5					mm
	r	7					mm
	A	4.80					cm2
Material:		S 275					
	f_y	275.00					MPa
	f_u	430.00					MPa
Angle	α	90.0					Deg

BOLTS

Bar 4

The shear plane passes through the THREADED portion of the bolt.

Class = 8.8 Bolt class
d = 12 [mm] Bolt diameter
d_0 = 13 [mm] Bolt opening diameter
A_s = 0.84 [cm^2] Effective section area of a bolt
A_v = 1.13 [cm^2] Area of bolt section

The shear plane passes through the THREADED portion of the bolt.
Class = 8.8 Bolt class
f_{yb} = 640.00 [MPa] Yield point
f_{ub} = 800.00 [MPa] Bolt tensile resistance
n = 2 Number of bolt columns
Bolt spacing 40 [mm]
e_1 = 30 [mm] Distance of the center of gravity of first bolt from the member end
e_2 = 25 [mm] Distance of the axis of bolts from the member edge
e_c = 0 [mm] Distance of the member end from the point of intersection of member axes

WELDS

Fillet welds of the gusset plate
b = 3 [mm] Edge b

GUSSET PLATE

l_p = 100 [mm] Plate length
h_p = 200 [mm] Plate height
t_p = 10 [mm] Plate thickness

Parameters
h_1 = 15 [mm] Cut
v_1 = 15 [mm] Cut
h_2 = 15 [mm] Cut
v_2 = 15 [mm] Cut
h_3 = 0 [mm] Cut
v_3 = 0 [mm] Cut
h_4 = 0 [mm] Cut
v_4 = 0 [mm] Cut
Center of gravity of the plate with respect to the center of gravity of bars (50;99)
e_V = 100 [mm] Vertical distance of the plate edge from the point of intersection of member axes
e_H = 41 [mm] Horizontal distance of the plate edge from the point of intersection of member axes
Material: S 275
f_y = 275.00 [MPa] Resistance

MATERIAL FACTORS

γ_{M0} = 1.00 Partial safety factor [2.2]
γ_{M2} = 1.25 Partial safety factor [2.2]

LOADS

Case: Manual calculations.
$N_{b4,Ed}$ = 30.00 [kN] Axial force

RESULTS

BAR 4

BOLT CAPACITIES

$F_{v,Rd}$ = 32.37 [kN] Shear resistance of the shank of a single bolt $F_{v,Rd}= 0.6*f_{ub}*A_s*m/\gamma_{M2}$

Bolt bearing on the bar
Direction x
k_{1x} = 2.50 Coefficient for calculation of $F_{b,Rd}$ $k_{1x}=\min[2.8*(e_2/d_0)-1.7, 2.5]$
$k_{1x} > 0.0$ 2.50 > 0.00 verified
α_{bx} = 0.77 Coefficient determined by bolt spacing $\alpha_{bx}=\min[e_1/(3*d_0), p_1/(3*d_0)-0.25, f_{ub}/f_u, 1]$
$\alpha_{bx} > 0.0$ 0.77 > 0.00 verified
$F_{b,Rd1x}$ = 39.69 [kN] Design capacity in the limit state of plastification of the opening wall $F_{b,Rd1x}=k_{1x}*\alpha_{bx}*f_u*d*t_i/\gamma_{M2}$
Direction z
k_{1z} = 2.50 Coefficient for calculation of $F_{b,Rd}$ $k_{1z}=\min[2.8*(e_1/d_0)-1.7, 1.4*(p_1/d_0)-1.7, 2.5]$
$k_{1z} > 0.0$ 2.50 > 0.00 verified
α_{bz} = 0.64 Coefficient for calculation of $F_{b,Rd}$ $\alpha_{bz}=\min[e_2/(3*d_0), f_{ub}/f_u, 1]$
$\alpha_{bz} > 0.0$ 0.64 > 0.00 verified
$F_{b,Rd1z}$ = 33.08 [kN] Bearing resistance of a single bolt $F_{b,Rd1z}=k_{1z}*\alpha_{bz}*f_u*d*t_i/\gamma_{M2}$

Bolt bearing on the plate

Direction x

k_{1x} =	2.50	Coefficient for calculation of $F_{b,Rd}$		k_1=min[2.8*(e_2/d_0)-1.7, 2.5]
k_{1x} > 0.0		2.50 > 0.00	verified	
α_{bx} =	0.77	Coefficient determined by bolt spacing		α_{bx}=min[e_1/(3*d_0), p_1/(3*d_0)-0.25, f_{ub}/f_u, 1]
α_{bx} > 0.0		0.77 > 0.00	verified	
$F_{b,Rd2x}$ =	79.38 [kN]	Design capacity in the limit state of plastification of the opening wall		$F_{b,Rd2x}$=k_1*α_b*f_u*d*t_i/γ_{M2}

Direction z

k_{1z} =	2.50	Coefficient for calculation of $F_{b,Rd}$		k_{1z}=min[2.8*(e_1/d_0)-1.7, 1.4*(p_1/d_0)-1.7, 2.5]
k_{1z} > 0.0		2.50 > 0.00	verified	
α_{bz} =	1.00	Coefficient for calculation of $F_{b,Rd}$		α_{bz}=min[e_2/(3*d_0), f_{ub}/f_u, 1]
α_{bz} > 0.0		1.00 > 0.00	verified	
$F_{b,Rd2z}$ =	103.20 [kN]	Bearing resistance of a single bolt		$F_{b,Rd2z}$=k_{1z}*α_{bz}*f_u*d*t_i/γ_{M2}

VERIFICATION OF A CONNECTION DUE TO FORCES ACTING ON BOLTS

Bolt shear

e =	11 [mm]	Axial force eccentricity relative to the bolt axis		
M_0 =	0.33 [kN*m]	Real bending moment		M_0=$N_{b4,Ed}$*e
F_{NSd} =	15.00 [kN]	Component force in a bolt due to influence of the longitudinal force		F_{NSd} = $N_{b4,Ed}$/n
F_{MSd} =	8.22 [kN]	Component force in a bolt due to influence of the moment		F_{MSd}=M_0*x_{max}/Σx_i^2
$F_{x,Ed}$ =	15.00 [kN]	Design total force in a bolt on the direction x		$F_{x,Ed}$ = F_{NSd}
$F_{z,Ed}$ =	8.22 [kN]	Design total force in a bolt on the direction z		$F_{z,Ed}$ = F_{MSd}
F_{Ed} =	17.11 [kN]	Resultant shear force in a bolt		F_{Ed} = $\sqrt{(}$ $F_{x,Ed}^2$ + $F_{z,Ed}^2$)
F_{Rdx} =	39.69 [kN]	Effective design capacity of a bolt on the direction x		F_{Rdx}=min(F_{bRd1x}, F_{bRd2x})
F_{Rdz} =	33.08 [kN]	Effective design capacity of a bolt on the direction z		F_{Rdz}=min(F_{bRd1z}, F_{bRd2z})
$\lvert F_{x,Ed}\rvert \le F_{Rdx}$		|15.00| < 39.69	verified	(0.38)
$\lvert F_{z,Ed}\rvert \le F_{Rdz}$		|8.22| < 33.08	verified	(0.25)
$F_{Ed} \le F_{vRd}$		17.11 < 32.37	verified	(0.53)

VERIFICATION OF A SECTION WEAKENED BY OPENINGS

β_2 =	0.47	Reduction coefficient		[Table 3.8]
A_{net} =	4.15 [cm^2]	Net cross-sectional area		A_{net} = A - d_0*t_{f4}
$N_{u,Rd}$ =	67.03 [kN]	Design plastic resistance of the net section		$N_{u,Rd}$ = (β_2*A_{net}*f_{u4})/γ_{M2}
$N_{pl,Rd}$ =	118.86 [kN]	Design plastic resistance of the gross section		$N_{pl,Rd}$ = (0.9*A*f_{y4})/γ_{M2}
$\lvert N_{b4,Ed}\rvert \le N_{u,Rd}$		|30.00| < 67.03	verified	(0.45)
$\lvert N_{b4,Ed}\rvert \le N_{pl,Rd}$		|30.00| < 118.86	verified	(0.25)

BAR VERIFICATION - BLOCK TEARING

A_{nt} =	0.92 [cm^2]	Net area of the section in tension		
A_{nv} =	2.52 [cm^2]	Area of the section in shear		
V_{effRd} =	56.00 [kN]	Design capacity of a section weakened by openings		V_{effRd}=0.5*f_u*A_{nt}/γ_{M2} + (1/$\sqrt{3}$)*f_y*A_{nv}/γ_{M0}
$\lvert N_{b4,Ed}\rvert \le V_{effRd}$		|30.00| < 56.00	verified	(0.54)

CONNECTION OF PLATE

VERIFICATION OF FILLET WELDS

e =	9 [mm]	Axial force eccentricity relative to the centroid of a weld group		
M_0 =	0.14 [kN*m]	Real bending moment		M_0 = 0.5*$N_{b1,Ed}$*sin(α)*e
A_w =	3.00 [cm^2]	Weld area		A_w = a*l
σ =	77.00 [MPa]	Normal stress in a weld		σ =0.5*$N_{b1,Ed}$*sin(α)/A_w + M_0/W_{yw}
$\sigma_\perp$ =	54.45 [MPa]	Normal perpendicular stress in the weld		$\sigma_\perp$=σ/$\sqrt{2}$
$\lvert\sigma_\perp\rvert \le 0.9*f_u/\gamma_{M2}$		|54.45| < 309.60	verified	(0.18)
$\tau_\perp$ =	54.45 [MPa]	Perpendicular tangent stress		$\tau_\perp$=$\sigma_\perp$
β_w =	0.85	Correlation coefficient		[Table 4.1]
$\sqrt{[\sigma_\perp^2+3*\tau_\perp^2]} \le f_u/(\beta_w*\gamma_{M2})$		108.89 < 404.71	verified	(0.27)

Connection conforms to the code	Ratio	0.54

5 ΚΥΡΙΟΣ ΦΟΡΕΑΣ – ΧΩΡΟΣ ΑΝΑΜΟΝΗΣ

5.1 ΔΕΔΟΜΕΝΑ ΠΡΟΣΟΜΟΙΩΜΑΤΟΣ

Αρίθμηση μελών και κόμβων προσομοιώματος

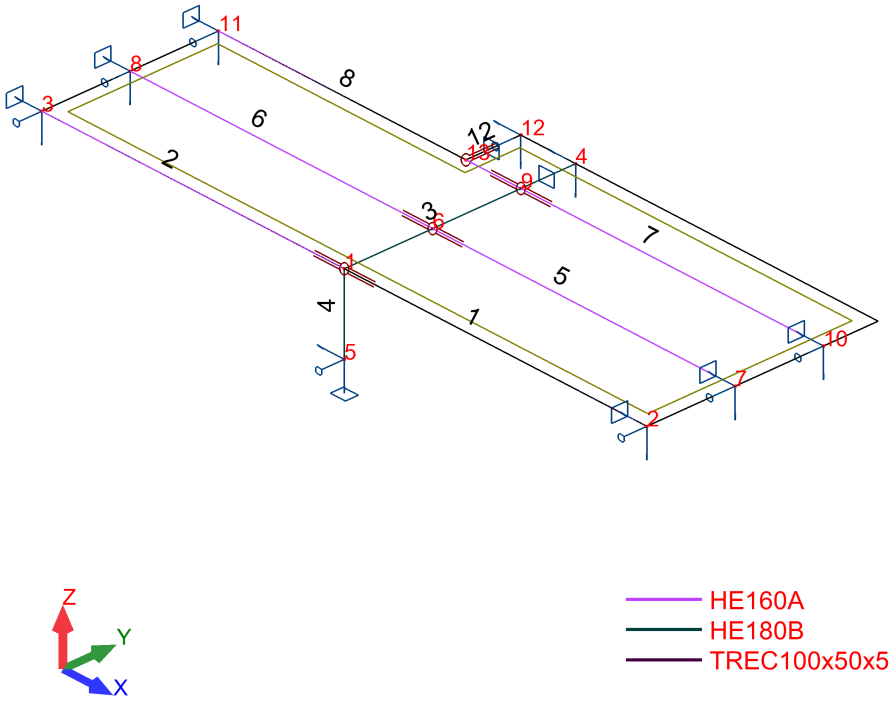

Data – Bars

Bar	Node 1	Node 2	Section	Material	Length (m)	Gamma (Deg)	Type
1	1	2	HE160A	S 275	3.85	0.0	_BEAM-SECONDARY
2	3	1	HE160A	S 275	3.85	0.0	_BEAM-SECONDARY
3	1	4	HE180B	S 275	2.75	0.0	_BEAM_FRAME
4	1	5	HE180B	S 275	0.90	-90.0	_COLUMN-FRAME
5	6	7	HE160A	S 275	3.85	0.0	_BEAM-SECONDARY
6	8	6	HE160A	S 275	3.85	0.0	_BEAM-SECONDARY
7	9	10	HE160A	S 275	3.85	0.0	_BEAM-SECONDARY
8	11	9	HE160A	S 275	3.85	0.0	_BEAM-SECONDARY
12	13	12	TREC100x50x5	S235	0.65	0.0	_BEAM-SECONDARY

Data – Sections

Section name	Bar list	AX (cm2)	AY (cm2)	AZ (cm2)	IX (cm4)	IY (cm4)	IZ (cm4)
HE160A	1 2 5to8	38.77	27.96	9.75	10.90	1672.98	615.57
HE180B	3 4	65.25	47.86	15.99	45.10	3831.13	1362.85
TREC100x50x5	12	13.88	6.17	6.17	134.60	169.90	55.06

Data – Supports

Support name	List of nodes	List of edges	List of objects	Support conditions
PINNED_RZ	5			UX UY UZ RZ
PINNED_RX	2 3 7 8 10 11			UX UY UZ RX
PINNED_RY	12			UX UY UZ RY
PINNED_RY_NO_UY	4			UX UZ RY

5.2 ΦΟΡΤΙΣΕΙΣ

Μόνιμο φορτίο (1:DL1)

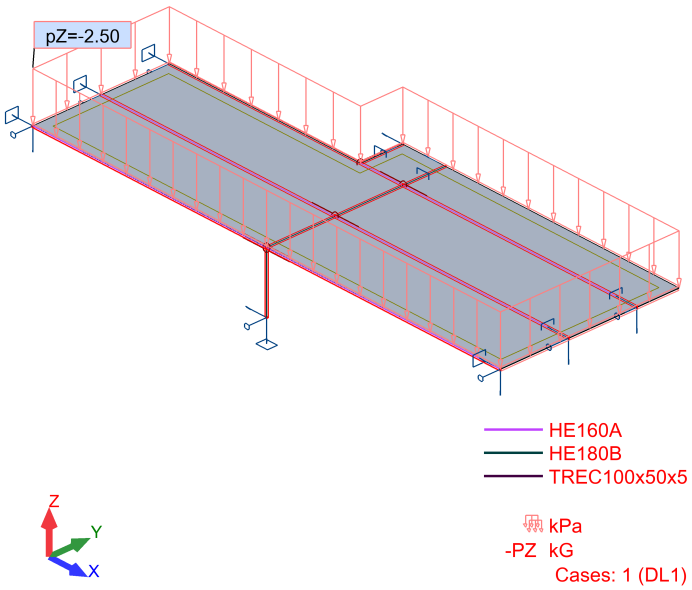

Κινητό φορτίο (2:LL1)

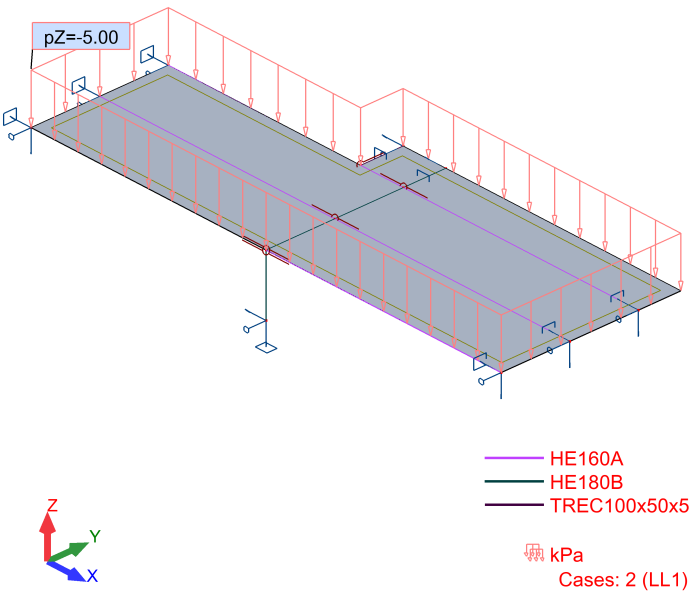

Σεισμικό φορτίο (3:EX+30%EY)

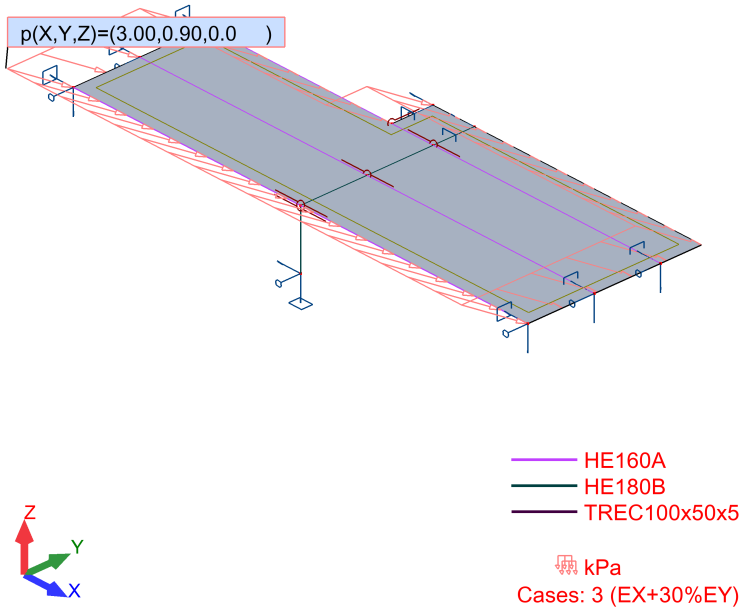

Σεισμικό φορτίο (5:30%EX+EY)

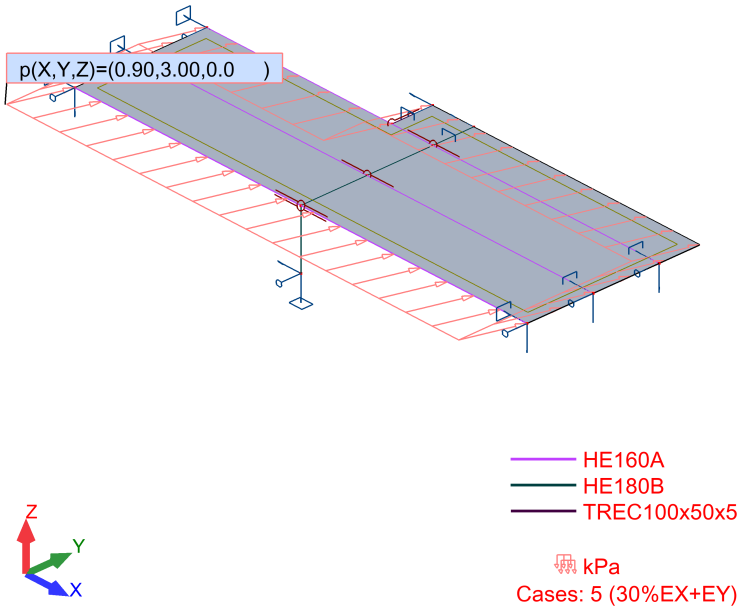

Loads – Cases

Case	Label	Case name	Nature	Analysis type
1	DL1	DL1	Structural	Static - Linear
2	LL1	LL1	Category A	Static - Linear
3	EX+30%EY	EX+30%EY	seismic	Static - Linear
4	EX-30%EY	EX-30%EY	seismic	Static - Linear
5	30%EX+EY	30%EX+EY	seismic	Static - Linear
6	30%EX-EY	30%EX-EY	seismic	Static - Linear
7	MOD7	Modal		Modal
8		ULS		Modal
9		ULS+		Modal
10		ULS-		Modal
11		SLS		Modal
12		SLS+		Modal
13		SLS-		Modal
14		SLS:CHR		Modal
15		SLS:CHR+		Modal
16		SLS:CHR-		Modal
17		SLS:FRE		Modal
18		SLS:FRE+		Modal
19		SLS:FRE-		Modal
20		SLS:QPR		Modal
21		SLS:QPR+		Modal
22		SLS:QPR-		Modal
23		ACC		Modal
24		ACC+		Modal
25		ACC-		Modal

Loads – Values

Case	Load type	List	Load values
1	self-weight	1to8 12 13	PZ Negative Factor=1.00
1	(FE) uniform		PZ=-2.50(kN/m2)
1	(FE) uniform	13	PZ=-2.50(kN/m2)
2	(FE) uniform		PZ=-5.00(kN/m2)
2	(FE) uniform	13	PZ=-5.00(kN/m2)
3	(FE) uniform		PX=3.00(kN/m2) PY=0.90(kN/m2)
3	(FE) uniform	13	PX=3.00(kN/m2) PY=0.90(kN/m2)
4	(FE) uniform		PX=3.00(kN/m2) PY=-0.90(kN/m2)
4	(FE) uniform	13	PX=3.00(kN/m2) PY=-0.90(kN/m2)
5	(FE) uniform		PX=0.90(kN/m2) PY=3.00(kN/m2)
5	(FE) uniform	13	PX=0.90(kN/m2) PY=3.00(kN/m2)
6	(FE) uniform		PX=0.90(kN/m2) PY=-3.00(kN/m2)
6	(FE) uniform	13	PX=0.90(kN/m2) PY=-3.00(kN/m2)

Combinations

Combinations/Comp.	Definition
ULS/\t1	1*1.35 + 2*1.50
ULS/\t2	1*1.35
ULS/\t3	1*1.00 + 2*1.50
ULS/\t4	1*1.00
SLS:CHR/\t1	1*1.00 + 2*1.00
SLS:CHR/\t2	1*1.00
SLS:FRE/\t3	1*1.00 + 2*0.50
SLS:FRE/\t4	1*1.00
SLS:QPR/\t5	1*1.00 + 2*0.30
SLS:QPR/\t6	1*1.00
SLS:CHR/\t1	1*1.00 + 2*1.00
SLS:CHR/\t2	1*1.00
SLS:FRE/\t1	1*1.00 + 2*0.50
SLS:FRE/\t2	1*1.00
SLS:QPR/\t1	1*1.00 + 2*0.30
SLS:QPR/\t2	1*1.00
ACC:SEI/\t1	1*1.00 + 2*0.30 + 3*1.00
ACC:SEI/\t2	1*1.00 + 3*1.00
ACC:SEI/\t3	1*1.00
ACC:SEI/\t4	1*1.00 + 2*0.30 + 4*1.00
ACC:SEI/\t5	1*1.00 + 4*1.00
ACC:SEI/\t6	1*1.00 + 2*0.30 + 5*1.00
ACC:SEI/\t7	1*1.00 + 5*1.00
ACC:SEI/\t8	1*1.00 + 2*0.30 + 6*1.00
ACC:SEI/\t9	1*1.00 + 6*1.00
ACC:SEI/\t10	1*1.00 + 2*0.30 + 3*-1.00
ACC:SEI/\t11	1*1.00 + 3*-1.00
ACC:SEI/\t12	1*1.00 + 2*0.30 + 4*-1.00
ACC:SEI/\t13	1*1.00 + 4*-1.00
ACC:SEI/\t14	1*1.00 + 2*0.30 + 5*-1.00
ACC:SEI/\t15	1*1.00 + 5*-1.00
ACC:SEI/\t16	1*1.00 + 2*0.30 + 6*-1.00
ACC:SEI/\t17	1*1.00 + 6*-1.00

5.3 ΑΠΟΤΕΛΕΣΜΑΤΑ

Forces

Bar/Node/Case	FX (kN)	FY (kN)	FZ (kN)	MX (kNm)	MY (kNm)	MZ (kNm)
1/1/ULS+	0	0	11.77	0	0	0
1/1/ULS-	0	0	3.1	-0.01	0	0
1/1/SLS+	0	0	8.15	0	0	0
1/1/SLS-	0	0	3.1	-0.01	0	0
1/1/SLS:CHR+	0	0	8.15	0	0	0
1/1/SLS:CHR-	0	0	3.1	-0.01	0	0
1/1/SLS:FRE+	0	0	5.63	0	0	0
1/1/SLS:FRE-	0	0	3.1	0	0	0
1/1/SLS:QPR+	0	0	4.62	0	0	0
1/1/SLS:QPR-	0	0	3.1	0	0	0
1/1/ACC+	0.01	3.03	4.62	0	0	0
1/1/ACC-	-0.01	-3.03	3.1	-0.01	0	0
1/2/ULS+	0	0	-3.1	0	0	0
1/2/ULS-	0	0	-11.77	-0.01	0	0
1/2/SLS+	0	0	-3.1	0	0	0
1/2/SLS-	0	0	-8.15	-0.01	0	0
1/2/SLS:CHR+	0	0	-3.1	0	0	0
1/2/SLS:CHR-	0	0	-8.15	-0.01	0	0
1/2/SLS:FRE+	0	0	-3.1	0	0	0
1/2/SLS:FRE-	0	0	-5.63	0	0	0
1/2/SLS:QPR+	0	0	-3.1	0	0	0
1/2/SLS:QPR-	0	0	-4.62	0	0	0
1/2/ACC+	6.08	3.03	-3.1	0	0	0
1/2/ACC-	-6.08	-3.03	-4.62	-0.01	0	0
2/3/ULS+	0	0	11.77	0.01	0	0
2/3/ULS-	0	0	3.1	0	0	0
2/3/SLS+	0	0	8.15	0.01	0	0
2/3/SLS-	0	0	3.1	0	0	0
2/3/SLS:CHR+	0	0	8.15	0.01	0	0
2/3/SLS:CHR-	0	0	3.1	0	0	0
2/3/SLS:FRE+	0	0	5.63	0	0	0
2/3/SLS:FRE-	0	0	3.1	0	0	0
2/3/SLS:QPR+	0	0	4.62	0	0	0
2/3/SLS:QPR-	0	0	3.1	0	0	0
2/3/ACC+	6.08	3.03	4.62	0.01	0	0
2/3/ACC-	-6.08	-3.03	3.1	0	0	0
2/1/ULS+	0	0	-3.1	0.01	0	0
2/1/ULS-	0	0	-11.77	0	0	0
2/1/SLS+	0	0	-3.1	0.01	0	0

2/1/SLS-	0	0	-8.15	0	0	0
2/1/SLS:CHR+	0	0	-3.1	0.01	0	0
2/1/SLS:CHR-	0	0	-8.15	0	0	0
2/1/SLS:FRE+	0	0	-3.1	0	0	0
2/1/SLS:FRE-	0	0	-5.63	0	0	0
2/1/SLS:QPR+	0	0	-3.1	0	0	0
2/1/SLS:QPR-	0	0	-4.62	0	0	0
2/1/ACC+	0.01	3.03	-3.1	0.01	0	0
2/1/ACC-	-0.01	-3.03	-4.62	0	0	0
3/1/ULS+	6.22	0	40.98	0	-1.44	0
3/1/ULS-	1.59	0	10.63	0	-5.61	0
3/1/SLS+	4.3	0	28.38	0	-1.44	0
3/1/SLS-	1.59	0	10.63	0	-3.88	0
3/1/SLS:CHR+	4.3	0	28.38	0	-1.44	0
3/1/SLS:CHR-	1.59	0	10.63	0	-3.88	0
3/1/SLS:FRE+	2.95	0	19.51	0	-1.44	0
3/1/SLS:FRE-	1.59	0	10.63	0	-2.66	0
3/1/SLS:QPR+	2.41	0	15.96	0	-1.44	0
3/1/SLS:QPR-	1.59	0	10.63	0	-2.17	0
3/1/ACC+	15.42	0.03	22.2	0	15.72	0
3/1/ACC-	-11.42	-0.03	4.39	0	-19.33	0
3/4/ULS+	0	0	-12.42	0	0	0
3/4/ULS-	0	0	-48.17	0	0	0
3/4/SLS+	0	0	-12.42	0	0	0
3/4/SLS-	0	0	-33.36	0	0	0
3/4/SLS:CHR+	0	0	-12.42	0	0	0
3/4/SLS:CHR-	0	0	-33.36	0	0	0
3/4/SLS:FRE+	0	0	-12.42	0	0	0
3/4/SLS:FRE-	0	0	-22.89	0	0	0
3/4/SLS:QPR+	0	0	-12.42	0	0	0
3/4/SLS:QPR-	0	0	-18.7	0	0	0
3/4/ACC+	0	0.26	-6.19	0	0	0
3/4/ACC-	0	-0.26	-24.94	0	0	0
4/1/ULS+	64.51	0	-1.59	0	5.59	0
4/1/ULS-	16.84	0	-6.22	0	1.43	0
4/1/SLS+	44.69	0	-1.59	0	3.87	0
4/1/SLS-	16.84	0	-4.3	0	1.43	0
4/1/SLS:CHR+	44.69	0	-1.59	0	3.87	0
4/1/SLS:CHR-	16.84	0	-4.3	0	1.43	0
4/1/SLS:FRE+	30.76	0	-1.59	0	2.65	0
4/1/SLS:FRE-	16.84	0	-2.95	0	1.43	0
4/1/SLS:QPR+	25.19	0	-1.59	0	2.17	0
4/1/SLS:QPR-	16.84	0	-2.41	0	1.43	0
4/1/ACC+	31.44	0	17.48	0	19.33	0

4/1/ACC-	10.59	0	-21.48	0	-15.73	0
4/5/ULS+	65.12	0	-1.59	0	0	0
4/5/ULS-	17.29	0	-6.22	0	0	0
4/5/SLS+	45.14	0	-1.59	0	0	0
4/5/SLS-	17.29	0	-4.3	0	0	0
4/5/SLS:CHR+	45.14	0	-1.59	0	0	0
4/5/SLS:CHR-	17.29	0	-4.3	0	0	0
4/5/SLS:FRE+	31.22	0	-1.59	0	0	0
4/5/SLS:FRE-	17.29	0	-2.95	0	0	0
4/5/SLS:QPR+	25.65	0	-1.59	0	0	0
4/5/SLS:QPR-	17.29	0	-2.41	0	0	0
4/5/ACC+	31.89	0	17.48	0	0	0
4/5/ACC-	11.05	0	-21.48	0	0	0
5/6/ULS+	0	0	22.76	0	0	0
5/6/ULS-	0	0	5.63	0	0	0
5/6/SLS+	0	0	15.73	0	0	0
5/6/SLS-	0	0	5.63	0	0	0
5/6/SLS:CHR+	0	0	15.73	0	0	0
5/6/SLS:CHR-	0	0	5.63	0	0	0
5/6/SLS:FRE+	0	0	10.68	0	0	0
5/6/SLS:FRE-	0	0	5.63	0	0	0
5/6/SLS:QPR+	0	0	8.66	0	0	0
5/6/SLS:QPR-	0	0	5.63	0	0	0
5/6/ACC+	0.05	6.06	8.66	0	0	0
5/6/ACC-	-0.05	-6.06	5.63	0	0	0
5/7/ULS+	0	0	-5.63	0	0	0
5/7/ULS-	0	0	-22.76	0	0	0
5/7/SLS+	0	0	-5.63	0	0	0
5/7/SLS-	0	0	-15.73	0	0	0
5/7/SLS:CHR+	0	0	-5.63	0	0	0
5/7/SLS:CHR-	0	0	-15.73	0	0	0
5/7/SLS:FRE+	0	0	-5.63	0	0	0
5/7/SLS:FRE-	0	0	-10.68	0	0	0
5/7/SLS:QPR+	0	0	-5.63	0	0	0
5/7/SLS:QPR-	0	0	-8.66	0	0	0
5/7/ACC+	12.18	6.06	-5.63	0	0	0
5/7/ACC-	-12.18	-6.06	-8.66	0	0	0
6/8/ULS+	0	0	22.76	0	0	0
6/8/ULS-	0	0	5.63	0	0	0
6/8/SLS+	0	0	15.73	0	0	0
6/8/SLS-	0	0	5.63	0	0	0
6/8/SLS:CHR+	0	0	15.73	0	0	0
6/8/SLS:CHR-	0	0	5.63	0	0	0
6/8/SLS:FRE+	0	0	10.68	0	0	0

6/8/SLS:FRE-	0	0	5.63	0	0	0
6/8/SLS:QPR+	0	0	8.66	0	0	0
6/8/SLS:QPR-	0	0	5.63	0	0	0
6/8/ACC+	12.18	6.06	8.66	0	0	0
6/8/ACC-	-12.18	-6.06	5.63	0	0	0
6/6/ULS+	0	0	-5.63	0	0	0
6/6/ULS-	0	0	-22.76	0	0	0
6/6/SLS+	0	0	-5.63	0	0	0
6/6/SLS-	0	0	-15.73	0	0	0
6/6/SLS:CHR+	0	0	-5.63	0	0	0
6/6/SLS:CHR-	0	0	-15.73	0	0	0
6/6/SLS:FRE+	0	0	-5.63	0	0	0
6/6/SLS:FRE-	0	0	-10.68	0	0	0
6/6/SLS:QPR+	0	0	-5.63	0	0	0
6/6/SLS:QPR-	0	0	-8.66	0	0	0
6/6/ACC+	0.05	6.06	-5.63	0	0	0
6/6/ACC-	-0.05	-6.06	-8.66	0	0	0
7/9/ULS+	0	0	25.37	0.01	0	0
7/9/ULS-	0	0	6.23	0	0	0
7/9/SLS+	0	0	17.54	0	0	0
7/9/SLS-	0	0	6.23	0	0	0
7/9/SLS:CHR+	0	0	17.54	0	0	0
7/9/SLS:CHR-	0	0	6.23	0	0	0
7/9/SLS:FRE+	0	0	11.88	0	0	0
7/9/SLS:FRE-	0	0	6.23	0	0	0
7/9/SLS:QPR+	0	0	9.62	0	0	0
7/9/SLS:QPR-	0	0	6.23	0	0	0
7/9/ACC+	1.46	6.79	9.62	0	0	0
7/9/ACC-	-1.46	-6.79	6.23	0	0	0
7/10/ULS+	0	0	-6.23	0.01	0	0
7/10/ULS-	0	0	-25.37	0	0	0
7/10/SLS+	0	0	-6.23	0	0	0
7/10/SLS-	0	0	-17.54	0	0	0
7/10/SLS:CHR+	0	0	-6.23	0	0	0
7/10/SLS:CHR-	0	0	-17.54	0	0	0
7/10/SLS:FRE+	0	0	-6.23	0	0	0
7/10/SLS:FRE-	0	0	-11.88	0	0	0
7/10/SLS:QPR+	0	0	-6.23	0	0	0
7/10/SLS:QPR-	0	0	-9.62	0	0	0
7/10/ACC+	12.11	6.79	-6.23	0	0	0
7/10/ACC-	-12.11	-6.79	-9.62	0	0	0
8/11/ULS+	0	1.38	12.13	0	0	0
8/11/ULS-	0	0.35	3.18	-0.01	0	0
8/11/SLS+	0	0.96	8.4	0	0	0

8/11/SLS-	0	0.35	3.18	0	0	0
8/11/SLS:CHR+	0	0.96	8.4	0	0	0
8/11/SLS:CHR-	0	0.35	3.18	0	0	0
8/11/SLS:FRE+	0	0.66	5.79	0	0	0
8/11/SLS:FRE-	0	0.35	3.18	0	0	0
8/11/SLS:QPR+	0	0.53	4.75	0	0	0
8/11/SLS:QPR-	0	0.35	3.18	0	0	0
8/11/ACC+	8.49	1.44	4.76	0	0	0
8/11/ACC-	-8.49	-0.55	3.18	0	0	0
8/9/ULS+	0	-1.59	-4.19	0	0	0
8/9/ULS-	0	-6.22	-16.4	-0.01	0	0
8/9/SLS+	0	-1.59	-4.19	0	0	0
8/9/SLS-	0	-4.3	-11.35	0	0	0
8/9/SLS:CHR+	0	-1.59	-4.19	0	0	0
8/9/SLS:CHR-	0	-4.3	-11.35	0	0	0
8/9/SLS:FRE+	0	-1.59	-4.19	0	0	0
8/9/SLS:FRE-	0	-2.95	-7.77	0	0	0
8/9/SLS:QPR+	0	-1.59	-4.19	0	0	0
8/9/SLS:QPR-	0	-2.41	-6.34	0	0	0
8/9/ACC+	1.06	4.31	-4.18	0	0	0
8/9/ACC-	-1.06	-8.31	-6.35	0	0	0
12/13/ULS+	7.6	0	0.05	-0.13	0	0
12/13/ULS-	1.95	0	0.03	-0.51	0	0
12/13/SLS+	5.26	0	0.03	-0.13	0	0
12/13/SLS-	1.95	0	0.03	-0.35	0	0
12/13/SLS:CHR+	5.26	0	0.03	-0.13	0	0
12/13/SLS:CHR-	1.95	0	0.03	-0.35	0	0
12/13/SLS:FRE+	3.6	0	0.03	-0.13	0	0
12/13/SLS:FRE-	1.95	0	0.03	-0.24	0	0
12/13/SLS:QPR+	2.94	0	0.03	-0.13	0	0
12/13/SLS:QPR-	1.95	0	0.03	-0.2	0	0
12/13/ACC+	15.36	0	0.03	-0.11	0	0
12/13/ACC-	-10.47	0	0.03	-0.22	0	0
12/12/ULS+	7.6	0	-0.03	-0.13	0	0
12/12/ULS-	1.95	0	-0.05	-0.51	0	0
12/12/SLS+	5.26	0	-0.03	-0.13	0	0
12/12/SLS-	1.95	0	-0.03	-0.35	0	0
12/12/SLS:CHR+	5.26	0	-0.03	-0.13	0	0
12/12/SLS:CHR-	1.95	0	-0.03	-0.35	0	0
12/12/SLS:FRE+	3.6	0	-0.03	-0.13	0	0
12/12/SLS:FRE-	1.95	0	-0.03	-0.24	0	0
12/12/SLS:QPR+	2.94	0	-0.03	-0.13	0	0
12/12/SLS:QPR-	1.95	0	-0.03	-0.2	0	0
12/12/ACC+	15.36	0	-0.03	-0.11	0	0

12/12/ACC-	-10.47	0	-0.03	-0.22	0	0

Reactions – Values

Node/Case	FX (kN)	FY (kN)	FZ (kN)	MX (kNm)	MY (kNm)	MZ (kNm)
2/ULS+	0	0	11.77	0.01	0	0
2/ULS-	0	0	3.1	0	0	0
2/SLS+	0	0	8.15	0.01	0	0
2/SLS-	0	0	3.1	0	0	0
2/SLS:CHR+	0	0	8.15	0.01	0	0
2/SLS:CHR-	0	0	3.1	0	0	0
2/SLS:FRE+	0	0	5.63	0	0	0
2/SLS:FRE-	0	0	3.1	0	0	0
2/SLS:QPR+	0	0	4.62	0	0	0
2/SLS:QPR-	0	0	3.1	0	0	0
2/ACC+	6.08	3.03	4.62	0.01	0	0
2/ACC-	-6.08	-3.03	3.1	0	0	0
3/ULS+	0	0	11.77	0.01	0	0
3/ULS-	0	0	3.1	0	0	0
3/SLS+	0	0	8.15	0.01	0	0
3/SLS-	0	0	3.1	0	0	0
3/SLS:CHR+	0	0	8.15	0.01	0	0
3/SLS:CHR-	0	0	3.1	0	0	0
3/SLS:FRE+	0	0	5.63	0	0	0
3/SLS:FRE-	0	0	3.1	0	0	0
3/SLS:QPR+	0	0	4.62	0	0	0
3/SLS:QPR-	0	0	3.1	0	0	0
3/ACC+	6.08	3.03	4.62	0.01	0	0
3/ACC-	-6.08	-3.03	3.1	0	0	0
4/ULS+	0	0	48.17	0	0	0
4/ULS-	0	0	12.42	0	0	0
4/SLS+	0	0	33.36	0	0	0
4/SLS-	0	0	12.42	0	0	0
4/SLS:CHR+	0	0	33.36	0	0	0
4/SLS:CHR-	0	0	12.42	0	0	0
4/SLS:FRE+	0	0	22.89	0	0	0
4/SLS:FRE-	0	0	12.42	0	0	0
4/SLS:QPR+	0	0	18.7	0	0	0
4/SLS:QPR-	0	0	12.42	0	0	0
4/ACC+	0.26	0	24.94	0	0	0
4/ACC-	-0.26	0	6.19	0	0	0
5/ULS+	0	6.22	65.12	0	0	0
5/ULS-	0	1.59	17.29	0	0	0
5/SLS+	0	4.3	45.14	0	0	0
5/SLS-	0	1.59	17.29	0	0	0
5/SLS:CHR+	0	4.3	45.14	0	0	0
5/SLS:CHR-	0	1.59	17.29	0	0	0

5/SLS:FRE+	0	2.95	31.22	0	0	0
5/SLS:FRE-	0	1.59	17.29	0	0	0
5/SLS:QPR+	0	2.41	25.65	0	0	0
5/SLS:QPR-	0	1.59	17.29	0	0	0
5/ACC+	0	21.48	31.89	0	0	0
5/ACC-	0	-17.48	11.05	0	0	0
7/ULS+	0	0	22.76	0	0	0
7/ULS-	0	0	5.63	0	0	0
7/SLS+	0	0	15.73	0	0	0
7/SLS-	0	0	5.63	0	0	0
7/SLS:CHR+	0	0	15.73	0	0	0
7/SLS:CHR-	0	0	5.63	0	0	0
7/SLS:FRE+	0	0	10.68	0	0	0
7/SLS:FRE-	0	0	5.63	0	0	0
7/SLS:QPR+	0	0	8.66	0	0	0
7/SLS:QPR-	0	0	5.63	0	0	0
7/ACC+	12.18	6.06	8.66	0	0	0
7/ACC-	-12.18	-6.06	5.63	0	0	0
8/ULS+	0	0	22.76	0	0	0
8/ULS-	0	0	5.63	0	0	0
8/SLS+	0	0	15.73	0	0	0
8/SLS-	0	0	5.63	0	0	0
8/SLS:CHR+	0	0	15.73	0	0	0
8/SLS:CHR-	0	0	5.63	0	0	0
8/SLS:FRE+	0	0	10.68	0	0	0
8/SLS:FRE-	0	0	5.63	0	0	0
8/SLS:QPR+	0	0	8.66	0	0	0
8/SLS:QPR-	0	0	5.63	0	0	0
8/ACC+	12.18	6.06	8.66	0	0	0
8/ACC-	-12.18	-6.06	5.63	0	0	0
10/ULS+	0	0	25.37	0	0	0
10/ULS-	0	0	6.23	-0.01	0	0
10/SLS+	0	0	17.54	0	0	0
10/SLS-	0	0	6.23	0	0	0
10/SLS:CHR+	0	0	17.54	0	0	0
10/SLS:CHR-	0	0	6.23	0	0	0
10/SLS:FRE+	0	0	11.88	0	0	0
10/SLS:FRE-	0	0	6.23	0	0	0
10/SLS:QPR+	0	0	9.62	0	0	0
10/SLS:QPR-	0	0	6.23	0	0	0
10/ACC+	12.11	6.79	9.62	0	0	0
10/ACC-	-12.11	-6.79	6.23	0	0	0
11/ULS+	0	1.38	12.13	0	0	0
11/ULS-	0	0.35	3.18	-0.01	0	0

11/SLS+	0	0.96	8.4	0	0	0
11/SLS-	0	0.35	3.18	0	0	0
11/SLS:CHR+	0	0.96	8.4	0	0	0
11/SLS:CHR-	0	0.35	3.18	0	0	0
11/SLS:FRE+	0	0.66	5.79	0	0	0
11/SLS:FRE-	0	0.35	3.18	0	0	0
11/SLS:QPR+	0	0.53	4.75	0	0	0
11/SLS:QPR-	0	0.35	3.18	0	0	0
11/ACC+	8.49	1.44	4.76	0	0	0
11/ACC-	-8.49	-0.55	3.18	0	0	0
12/ULS+	0	-1.95	0.05	0	0.51	0
12/ULS-	0	-7.6	0.03	0	0.13	0
12/SLS+	0	-1.95	0.03	0	0.35	0
12/SLS-	0	-5.26	0.03	0	0.13	0
12/SLS:CHR+	0	-1.95	0.03	0	0.35	0
12/SLS:CHR-	0	-5.26	0.03	0	0.13	0
12/SLS:FRE+	0	-1.95	0.03	0	0.24	0
12/SLS:FRE-	0	-3.6	0.03	0	0.13	0
12/SLS:QPR+	0	-1.95	0.03	0	0.2	0
12/SLS:QPR-	0	-2.94	0.03	0	0.13	0
12/ACC+	0	10.47	0.03	0	0.22	0
12/ACC-	0	-15.36	0.03	0	0.11	0
Case ULS+	ULS+					
Sum of val.	0	5.65	219.89	0.02	0.51	0
Sum of reac.	0	0	56.62	67.28	-11.56	0
Sum of forc.	0	0	-56.62	-67.28	11.56	0
Check val.	0	0	0	0	0	0
Precision	1.27E-11	4.83E-24				
Case ULS-	ULS-					
Sum of val.	0	-5.65	56.62	-0.01	0.13	0
Sum of reac.	0	0	56.62	67.28	-11.56	0
Sum of forc.	0	0	-56.62	-67.28	11.56	0
Check val.	0	0	0	0	0	0
Precision	1.27E-11	4.83E-24				
Case SLS+	SLS+					
Sum of val.	0	3.31	152.26	0.01	0.35	0
Sum of reac.	0	0	56.62	67.28	-11.56	0
Sum of forc.	0	0	-56.62	-67.28	11.56	0
Check val.	0	0	0	0	0	0
Precision	1.27E-11	4.83E-24				

Case SLS-	SLS-					
Sum of val.	0	-3.31	56.62	0	0.13	0
Sum of reac.	0	0	56.62	67.28	-11.56	0
Sum of forc.	0	0	-56.62	-67.28	11.56	0
Check val.	0	0	0	0	0	0
Precision	1.27E-11	4.83E-24				
Case SLS:CHR+	SLS:CHR+					
Sum of val.	0	3.31	152.26	0.01	0.35	0
Sum of reac.	0	0	56.62	67.28	-11.56	0
Sum of forc.	0	0	-56.62	-67.28	11.56	0
Check val.	0	0	0	0	0	0
Precision	1.27E-11	4.83E-24				
Case SLS:CHR-	SLS:CHR-					
Sum of val.	0	-3.31	56.62	0	0.13	0
Sum of reac.	0	0	56.62	67.28	-11.56	0
Sum of forc.	0	0	-56.62	-67.28	11.56	0
Check val.	0	0	0	0	0	0
Precision	1.27E-11	4.83E-24				
Case SLS:FRE+	SLS:FRE+					
Sum of val.	0	1.66	104.44	0.01	0.24	0
Sum of reac.	0	0	56.62	67.28	-11.56	0
Sum of forc.	0	0	-56.62	-67.28	11.56	0
Check val.	0	0	0	0	0	0
Precision	1.27E-11	4.83E-24				
Case SLS:FRE-	SLS:FRE-					
Sum of val.	0	-1.66	56.62	0	0.13	0
Sum of reac.	0	0	56.62	67.28	-11.56	0
Sum of forc.	0	0	-56.62	-67.28	11.56	0
Check val.	0	0	0	0	0	0
Precision	1.27E-11	4.83E-24				
Case SLS:QPR+	SLS:QPR+					
Sum of val.	0	0.99	85.31	0.01	0.2	0
Sum of reac.	0	0	56.62	67.28	-11.56	0
Sum of forc.	0	0	-56.62	-67.28	11.56	0
Check val.	0	0	0	0	0	0
Precision	1.27E-11	4.83E-24				
Case SLS:QPR-	SLS:QPR-					
Sum of val.	0	-0.99	56.62	0	0.13	0

Sum of reac.	0	0	56.62	67.28	-11.56	0
Sum of forc.	0	0	-56.62	-67.28	11.56	0
Check val.	0	0	0	0	0	0
Precision	1.27E-11	4.83E-24				
Case ACC+	ACC+					
Sum of val.	57.38	58.38	97.8	0.02	0.22	0
Sum of reac.	17.21	-57.38	56.62	67.28	-11.56	-34.81
Sum of forc.	-17.21	57.38	-56.62	-67.28	11.56	34.81
Check val.	0	0	0	0	0	0
Precision	-1.28E-11	-1.29E-23				
Case ACC-	ACC-					
Sum of val.	-57.38	-58.38	44.13	-0.01	0.11	0
Sum of reac.	17.21	-57.38	56.62	67.28	-11.56	-34.81
Sum of forc.	-17.21	57.38	-56.62	-67.28	11.56	34.81
Check val.	0	0	0	0	0	0
Precision	-1.28E-11	-1.29E-23				

ΕΛΕΓΧΟΣ ΜΕΛΩΝ

Member	Section	Material	Lay	Laz	Ratio	Case	Ratio(uy)	Case (uy)	Ratio(uz)	Case (uz)	Ratio(vx)	Case (vx)	Ratio(vy)	Case (vy)
1	HE160A	S 275	58.61	96.62	0.22	8 ULS /1/	0.00	11 SLS /1/	0.22	11 SLS /1/	-	-	-	-
2	HE160A	S 275	58.61	96.62	0.22	8 ULS /1/	0.00	1*2	0.22	11 SLS /1/	-	-	-	-
3	HE180B	S 275	35.89	22.98	0.28	8 ULS /1/	0.00	11 SLS /1/	0.22	11 SLS /1/	-	-	-	-
4	HE180B	S 275	11.75	19.69	0.15	23 ACC /8/	-	-	-	-	0.00	11 SLS /1/	0.35	11 SLS /1/
5	HE160A	S 275	58.61	96.62	0.43	8 ULS /1/	0.00	11 SLS /1/	0.43	11 SLS /1/	-	-	-	-
6	HE160A	S 275	58.61	96.62	0.43	8 ULS /1/	0.00	11 SLS /1/	0.43	11 SLS /1/	-	-	-	-
7	HE160A	S 275	58.61	96.62	0.48	8 ULS /1/	0.00	1*2	0.48	11 SLS /1/	-	-	-	-
8	HE160A	S 275	58.61	96.62	0.30	8 ULS /1/	0.17	11 SLS /1/	0.24	11 SLS /1/	-	-	-	-
12	TREC100x50x5	S235	18.58	32.64	0.09	8 ULS /1/	0.00	11 SLS /1/	0.00	11 SLS /1/	-	-	-	-

ΕΔΡΑΣΗ ΥΠΟΣΤΥΛΩΜΑΤΟΣ HEB180

www.hilti.com

Profis Anchor 2.8.5

Company:		Page:	1
Specifier:		Project:	
Address:		Sub-Project I Pos. No.:	
Phone I Fax:	|	Date:	18/11/2019
E-Mail:			

Specifier's comments:

1 Input data



Anchor type and diameter:	**HIT-HY 200 + HIT-V (8.8) M16**
Seismic/Filling set or any suitable annular gap filling solution	
Effective embedment depth:	$h_{ef,act}$ = 150 mm ($h_{ef,limit}$ = - mm)
Material:	8.8
Evaluation Service Report:	ETA 11/0493
Issued I Valid:	8/7/2019 | -
Proof:	SOFA design method + fib (07/2011) - after ETAG BOND testing
Stand-off installation:	without clamping (anchor); restraint level (anchor plate): 2.00; e_b = 30 mm; t = 20 mm
	Hilti Grout: , multipurpose, $f_{c,Grout}$ = 30.00 N/mm^2
Anchor plate:	l_x x l_y x t = 210 mm x 210 mm x 20 mm; (Recommended plate thickness: not calculated
Profile:	IPB/HEB, IPB 180 / HE 180 B; (L x W x T x FT) = 180 mm x 180 mm x 9 mm x 14 mm
Base material:	cracked concrete, C25/30, $f_{c,cyl}$ = 25.00 N/mm^2; h = 250 mm, Temp. short/long: 40/24 °C
Installation:	**hammer drilled hole, Installation condition: Dry**
Reinforcement:	no reinforcement or reinforcement spacing >= 150 mm (any Ø) or >= 100 mm (Ø <= 10 mm)
	no longitudinal edge reinforcement
	Reinforcement to control splitting according to fib (07/2011), 16.1.5 present

R - The anchor calculation is based on a rigid anchor plate assumption.

Geometry [mm] & Loading [kN, kNm]

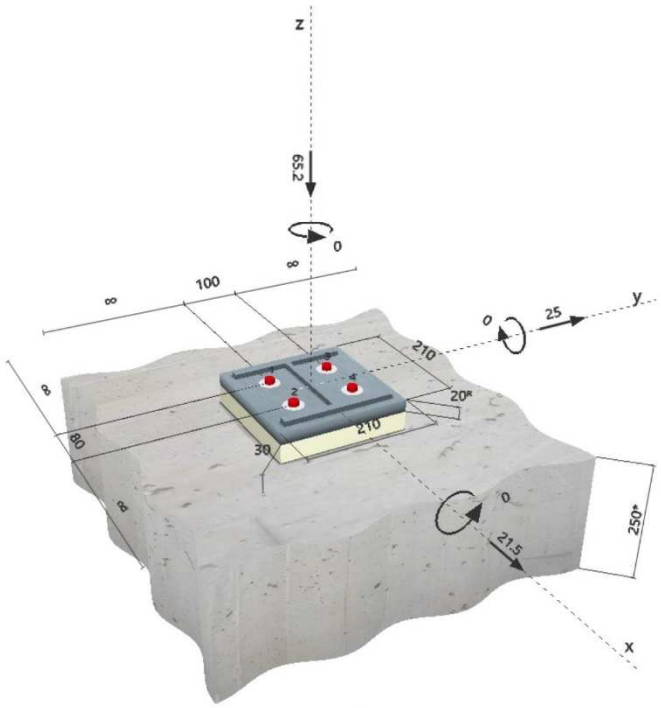

Input data and results must be checked for agreement with the existing conditions and for plausibility!
PROFIS Anchor (c) 2003-2009 Hilti AG, FL-9494 Schaan Hilti is a registered Trademark of Hilti AG, Schaan

2 Load case/Resulting anchor forces

Load case: Design loads

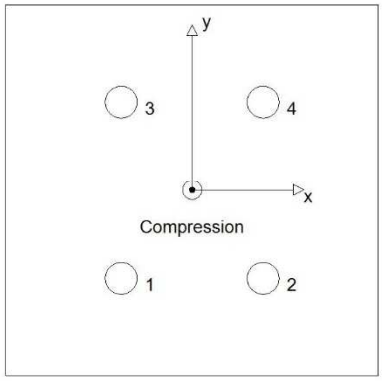

Anchor reactions [kN]
Tension force: (+Tension, -Compression)

Anchor	Tension force	Shear force	Shear force x	Shear force y
1	0.000	8.243	5.375	6.250
2	0.000	8.243	5.375	6.250
3	0.000	8.243	5.375	6.250
4	0.000	8.243	5.375	6.250

max. concrete compressive strain: 0.05 [‰]
max. concrete compressive stress: 1.48 [N/mm^2]
resulting tension force in (x/y)=(0/0): 0.000 [kN]
resulting compression force in (x/y)=(0/0): 65.200 [kN]

Anchor forces are calculated based on the assumption of a rigid anchor plate.

3 Tension load SOFA (fib (07/2011), section 16.2.1)

	Load [kN]	Capacity [kN]	Utilization β_N [%]	Status
Steel Strength*	N/A	N/A	N/A	N/A
Combined pullout-concrete cone failure**	N/A	N/A	N/A	N/A
Concrete Breakout Strength**	N/A	N/A	N/A	N/A
Splitting failure**	N/A	N/A	N/A	N/A

* anchor having the highest loading **anchor group (anchors in tension)

Input data and results must be checked for agreement with the existing conditions and for plausibility!
PROFIS Anchor (c) 2003-2009 Hilti AG, FL-9494 Schaan Hilti is a registered Trademark of Hilti AG, Schaan

4 Shear load SOFA (fib (07/2011), section 16.2.2)

	Load [kN]	Capacity [kN]	Utilization β_V [%]	Status
Steel Strength (without lever arm)*	8.243	50.240	17	OK
Steel failure (with lever arm)*	8.243	8.880	93	OK
Pryout Strength**	32.973	133.209	25	OK
Concrete edge failure in direction **	N/A	N/A	N/A	N/A

* anchor having the highest loading **anchor group (relevant anchors)

4.1 Steel Strength (without lever arm)

$V_{Rk,s}$ [kN]	$\gamma_{M,s}$	$V_{Rd,s}$ [kN]	V_{Sd} [kN]
62.800	1.250	50.240	8.243

4.2 Steel failure (with lever arm)

l [mm]	α_M
48	2.00

N_{Sd} / $N_{Rd,s}$	1 - N_{Sd} / $N_{Rd,s}$	$M^0_{Rk,s}$ [kNm]	$M_{Rk,s} = M^0_{Rk,s}$ (1 - N_{Sd}/$N_{Rd,s}$) [kNm]
0.000	1.000	0.266	0.266

$V^M_{Rk,s} = \alpha_M * M_{Rk,s}$ / l [kN]	$\gamma_{Ms,b,V}$	$V^M_{Rd,s}$ [kN]	V_{Sd} [kN]
11.100	1.250	8.880	8.243

4.3 Pryout Strength (Bond Strength controls)

$A_{p,N}$ [mm²]	$A^0_{p,N}$ [mm²]	$\psi_{A,Np}$	$\tau_{Rk,ucr,25}$ [N/mm²]	$c_{cr,Np}$ [mm]	$s_{cr,Np}$ [mm]	c_{min} [mm]
291,500	202,500	1.440	18.00	225	450	∞

ψ_c	$\tau_{Rk,cr}$ [N/mm²]	max $\tau_{Rk,cr}$ [N/mm²]	k_4	$\psi^0_{g,Np}$	$\psi_{g,Np}$
1.020	8.67	9.38	2.000	1.111	1.061

$e_{c1,V}$ [mm]	$\psi_{ec1,Np}$	$e_{c2,V}$ [mm]	$\psi_{ec2,Np}$	$\psi_{s,Np}$	$\psi_{re,Np}$
0	1.000	0	1.000	1.000	1.000

$N^0_{Rk,p}$ [kN]	$N_{Rk,p}$ [kN]	$\gamma_{M,c,p}$	$V_{Rd,cp}$ [kN]	V_{Sd} [kN]
65.387	99.907	1.500	133.209	32.973

5 Displacements (highest loaded anchor)

Short term loading:

N_{Sk} = 0.000 [kN] δ_N = 0.000 [mm]
V_{Sk} = 6.106 [kN] δ_V = 0.244 [mm]
δ_{NV} = 0.244 [mm]

Long term loading:

N_{Sk} = 0.000 [kN] δ_N = 0.000 [mm]
V_{Sk} = 6.106 [kN] δ_V = 0.366 [mm]
δ_{NV} = 0.366 [mm]

Comments: Tension displacements are valid with half of the required installation torque moment for uncracked concrete! Shear displacements are valid without friction between the concrete and the anchor plate! The gap due to the drilled hole and clearance hole tolerances are not included in this calculation!

The acceptable anchor displacements depend on the fastened construction and must be defined by the designer!

Input data and results must be checked for agreement with the existing conditions and for plausibility!
PROFIS Anchor (c) 2003-2009 Hilti AG, FL-9494 Schaan Hilti is a registered Trademark of Hilti AG, Schaan

6 Warnings

- The anchor design methods in PROFIS Anchor require rigid anchor plates per current regulations (ETAG 001/Annex C, EOTA TR029, etc.). This means load re-distribution on the anchors due to elastic deformations of the anchor plate are not considered - the anchor plate is assumed to be sufficiently stiff, in order not to be deformed when subjected to the design loading. PROFIS Anchor calculates the minimum required anchor plate thickness with FEM to limit the stress of the anchor plate based on the assumptions explained above. The proof if the rigid anchor plate assumption is valid is not carried out by PROFIS Anchor. Input data and results must be checked for agreement with the existing conditions and for plausibility!
- The accessory list in this report is for the information of the user only. In any case, the instructions for use provided with the product have to be followed to ensure a proper installation.
- Bore hole cleaning must be performed according to instructions for use (blow twice with oil-free compressed air (min. 6 bar), brush twice, blow twice with oil-free compressed air (min. 6 bar)).
- Characteristic bond resistances depend on short- and long-term temperatures.
- Please contact Hilti to check feasibility of HIT-V rod supply.
- The design method fib (07/2011) assumes that no hole clearance between the anchors and the fixture is present. This can be achieved by filling the gap with mortar of sufficient compressive strength (e.g. by using the HILTI Seismic/Filling set) or by other suitable means
- The compliance with current standards (e.g. EC3) is the responsibility of the user
- Checking the transfer of loads into the base material is required in accordance with fib (07/2011)!

Fastening meets the design criteria!

Input data and results must be checked for agreement with the existing conditions and for plausibility!
PROFIS Anchor (c) 2003-2009 Hilti AG, FL-9494 Schaan Hilti is a registered Trademark of Hilti AG, Schaan

7 Installation data

Anchor plate, steel: -
Profile: IPB/HEB, IPB 180 / HE 180 B; (L x W x T x FT) = 180 mm x 180 mm x 9 mm x 14 mm
Hole diameter in the fixture: d_f = 18 mm
Plate thickness (input): 20 mm
Recommended plate thickness: not calculated
Drilling method: Hammer drilled
Cleaning: Compressed air cleaning of the drilled hole according to instructions for use is required

Anchor type and diameter: HIT-HY 200 + HIT-V (8.8) M16
Installation torque: 0.080 kNm

Hole diameter in the base material: 18 mm
Hole depth in the base material: 150 mm
Minimum thickness of the base material: 186 mm

7.1 Recommended accessories

Drilling	Cleaning	Setting
• Suitable Rotary Hammer • Properly sized drill bit	• Compressed air with required accessories to blow from the bottom of the hole • Proper diameter wire brush	• Dispenser including cassette and mixer • Seismic/Filling set • Torque wrench

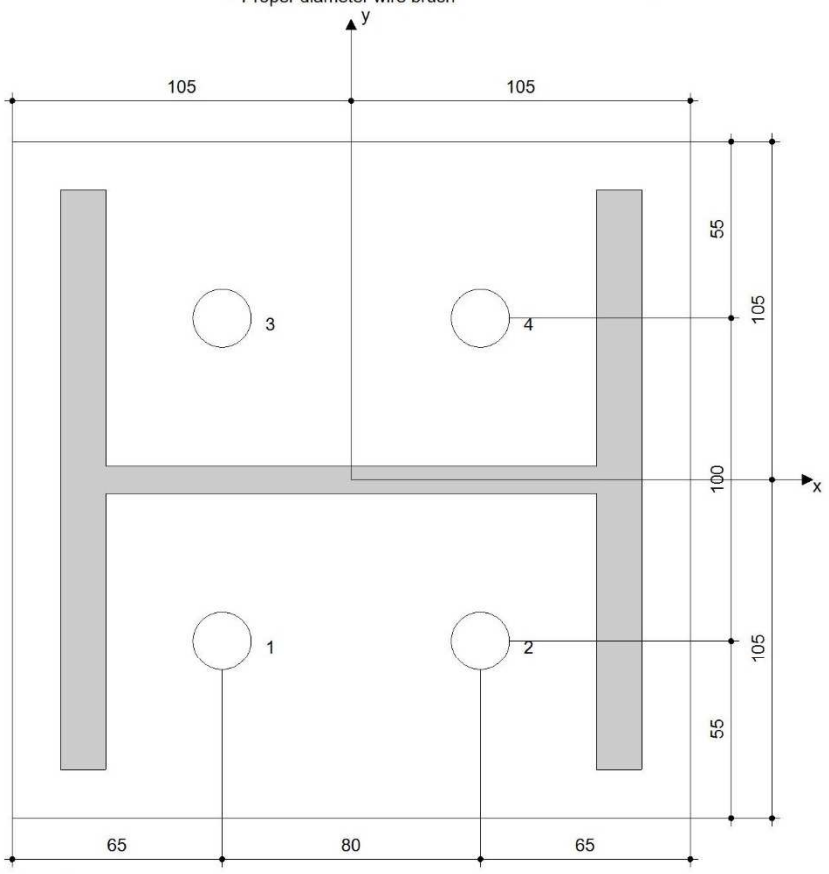

Coordinates Anchor [mm]

Anchor	x	y	c_{-x}	c_{+x}	c_{-y}	c_{+y}
1	-40	-50	-	-	-	-
2	40	-50	-	-	-	-
3	-40	50	-	-	-	-
4	40	50	-	-	-	-

Input data and results must be checked for agreement with the existing conditions and for plausibility!
PROFIS Anchor (c) 2003-2009 Hilti AG, FL-9494 Schaan Hilti is a registered Trademark of Hilti AG, Schaan

8 Remarks; Your Cooperation Duties

- Any and all information and data contained in the Software concern solely the use of Hilti products and are based on the principles, formulas and security regulations in accordance with Hilti's technical directions and operating, mounting and assembly instructions, etc., that must be strictly complied with by the user. All figures contained therein are average figures, and therefore use-specific tests are to be conducted prior to using the relevant Hilti product. The results of the calculations carried out by means of the Software are based essentially on the data you put in. Therefore, you bear the sole responsibility for the absence of errors, the completeness and the relevance of the data to be put in by you. Moreover, you bear sole responsibility for having the results of the calculation checked and cleared by an expert, particularly with regard to compliance with applicable norms and permits, prior to using them for your specific facility. The Software serves only as an aid to interpret norms and permits without any guarantee as to the absence of errors, the correctness and the relevance of the results or suitability for a specific application.
- You must take all necessary and reasonable steps to prevent or limit damage caused by the Software. In particular, you must arrange for the regular backup of programs and data and, if applicable, carry out the updates of the Software offered by Hilti on a regular basis. If you do not use the AutoUpdate function of the Software, you must ensure that you are using the current and thus up-to-date version of the Software in each case by carrying out manual updates via the Hilti Website. Hilti will not be liable for consequences, such as the recovery of lost or damaged data or programs, arising from a culpable breach of duty by you.

Input data and results must be checked for agreement with the existing conditions and for plausibility!
PROFIS Anchor (c) 2003-2009 Hilti AG, FL-9494 Schaan Hilti is a registered Trademark of Hilti AG, Schaan

ΕΔΡΑΣΗ ΔΟΚΟΥ HEA160

www.hilti.com **Profis Anchor 2.8.5**

Company:		Page:	1
Specifier:		Project:	
Address:		Sub-Project I Pos. No.:	
Phone I Fax:	|	Date:	18/11/2019
E-Mail:			

Specifier's comments:

1 Input data



Anchor type and diameter:	**HIT-HY 200 + HIT-V (8.8) M16**
Seismic/Filling set or any suitable annular gap filling solution	
Effective embedment depth:	$h_{ef,act}$ = 150 mm ($h_{ef,limit}$ = - mm)
Material:	8.8
Evaluation Service Report:	ETA 11/0493
Issued I Valid:	8/7/2019 | -
Proof:	SOFA design method + fib (07/2011) - after ETAG BOND testing
Stand-off installation:	e_b = 0 mm (no stand-off); t = 15 mm
Anchor plate:	l_x x l_y x t = 215 mm x 230 mm x 15 mm; (Recommended plate thickness: not calculated
Profile:	no profile
Base material:	cracked concrete, C25/30, $f_{c,cyl}$ = 25.00 N/mm²; h = 300 mm, Temp. short/long: 40/24 °C
Installation:	**hammer drilled hole, Installation condition: Dry**
Reinforcement:	no reinforcement or reinforcement spacing >= 150 mm (any Ø) or >= 100 mm (Ø <= 10 mm) no longitudinal edge reinforcement Reinforcement to control splitting according to fib (07/2011), 16.1.5 present

R - The anchor calculation is based on a rigid anchor plate assumption.

Geometry [mm] & Loading [kN, kNm]

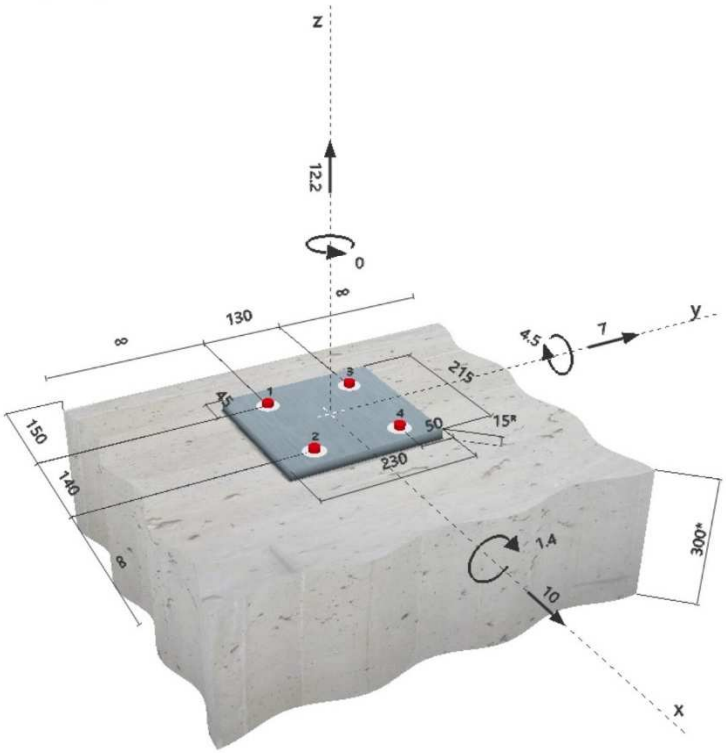

Input data and results must be checked for agreement with the existing conditions and for plausibility!
PROFIS Anchor (c) 2003-2009 Hilti AG, FL-9494 Schaan Hilti is a registered Trademark of Hilti AG, Schaan

1.1 Load combination

Case	Description	Forces [kN] / Moments [kNm]	Seismic	Fire	Max. Util. [%]
1	**Combination 1**	**V_x = 10.000; V_y = 7.000; N = 12.200; M_x = -1.400; M_y = 4.500; M_z = 0.000;**	**no**	**no**	**84**
2	Combination 2	V_x = 25.400; V_y = 0.000; N = 0.000; M_x = 0.000; M_y = 5.100; M_z = 0.000;	no	no	77

2 Load case/Resulting anchor forces

Load case: Design loads

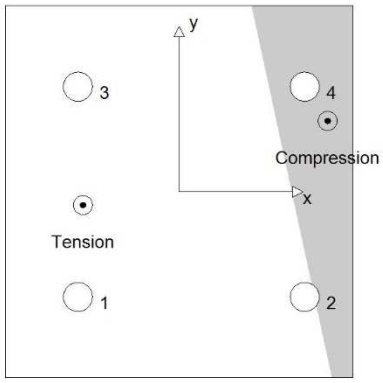

Anchor reactions [kN]
Tension force: (+Tension, -Compression)

Anchor	Tension force	Shear force	Shear force x	Shear force y
1	20.115	3.036	2.407	1.851
2	0.827	2.917	2.407	1.649
3	16.251	3.186	2.593	1.851
4	0.000	3.074	2.593	1.649

max. concrete compressive strain: 0.28 [‰]
max. concrete compressive stress: 8.27 [N/mm²]
resulting tension force in (x/y)=(-59/-8): 37.193 [kN]
resulting compression force in (x/y)=(92/44): 24.993 [kN]

Anchor forces are calculated based on the assumption of a rigid anchor plate.

3 Tension load SOFA (fib (07/2011), section 16.2.1)

	Load [kN]	Capacity [kN]	Utilization β_N [%]	Status
Steel Strength*	20.115	83.733	25	OK
Combined pullout-concrete cone failure**	37.193	44.540	84	OK
Concrete Breakout Strength**	37.193	46.469	81	OK
Splitting failure**	N/A	N/A	N/A	N/A

* anchor having the highest loading **anchor group (anchors in tension)

3.1 Steel Strength

$N_{Rk,s}$ [kN]	$\gamma_{M,s}$	$N_{Rd,s}$ [kN]	N_{Sd} [kN]
125.600	1.500	83.733	20.115

3.2 Combined pullout-concrete cone failure

$A_{p,N}$ [mm²]	$A^0_{p,N}$ [mm²]	$\psi_{A,Np}$	$\tau_{Rk,ucr,25}$ [N/mm²]	$s_{cr,Np}$ [mm]	$c_{cr,Np}$ [mm]	c_{min} [mm]
280,500	202,500	1.385	18.00	450	225	150

ψ_c	$\tau_{Rk,cr}$ [N/mm²]	max $\tau_{Rk,cr}$ [N/mm²]	$\psi^0_{g,Np}$	$\psi_{g,Np}$
1.020	8.67	9.38	1.081	1.037

$e_{c1,N}$ [mm]	$\psi_{ec1,Np}$	$e_{c2,N}$ [mm]	$\psi_{ec2,Np}$	$\psi_{s,Np}$	$\psi_{re,Np}$
44	0.838	13	0.944	0.900	1.000

$N^0_{Rk,p}$ [kN]	$N_{Rk,p}$ [kN]	$\gamma_{M,p}$	$N_{Rd,p}$ [kN]	N_{Sd} [kN]
65.387	66.809	1.500	44.540	37.193

Input data and results must be checked for agreement with the existing conditions and for plausibility!
PROFIS Anchor (c) 2003-2009 Hilti AG, FL-9494 Schaan Hilti is a registered Trademark of Hilti AG, Schaan

3.3 Concrete Breakout Strength

$A_{c,N}$ [mm²]	$A^0_{c,N}$ [mm²]	$\psi_{A,N}$	$c_{cr,N}$ [mm]	$s_{cr,N}$ [mm]	
280,500	202,500	1.385	225	450	
$e_{c1,N}$ [mm]	$\psi_{ec1,N}$	$e_{c2,N}$ [mm]	$\psi_{ec2,N}$	$\psi_{s,N}$	$\psi_{re,N}$
44	0.838	13	0.944	0.900	1.000
k_1	$N^0_{Rk,c}$ [kN]	$\gamma_{M,c}$	$N_{Rd,c}$ [kN]	N_{Sd} [kN]	
7.700	70.729	1.500	46.469	37.193	

Input data and results must be checked for agreement with the existing conditions and for plausibility!
PROFIS Anchor (c) 2003-2009 Hilti AG, FL-9494 Schaan Hilti is a registered Trademark of Hilti AG, Schaan

4 Shear load SOFA (fib (07/2011), section 16.2.2)

	Load [kN]	Capacity [kN]	Utilization β_V [%]	Status
Steel Strength (without lever arm)*	3.186	50.240	7	OK
Steel failure (with lever arm)*	N/A	N/A	N/A	N/A
Pryout Strength**	12.207	118.385	11	OK
Concrete edge failure in direction x-**	3.701	43.174	9	OK

* anchor having the highest loading **anchor group (relevant anchors)

4.1 Steel Strength (without lever arm)

$V_{Rk,s}$ [kN]	$\gamma_{M,s}$	$V_{Rd,s}$ [kN]	V_{Sd} [kN]
62.800	1.250	50.240	3.186

4.2 Pryout Strength (Bond Strength controls)

$A_{p,N}$ [mm²]	$A^0_{p,N}$ [mm²]	$\psi_{A,Np}$	$\tau_{Rk,ucr,25}$ [N/mm²]	$c_{cr,Np}$ [mm]	$s_{cr,Np}$ [mm]	c_{min} [mm]
298,700	202,500	1.475	18.00	225	450	150

ψ_c	$\tau_{Rk,cr}$ [N/mm²]	max $\tau_{Rk,cr}$ [N/mm²]	k_4	$\psi^0_{g,Np}$	$\psi_{g,Np}$
1.020	8.67	9.38	2.000	1.111	1.050

$e_{c1,V}$ [mm]	$\psi_{ec1,Np}$	$e_{c2,V}$ [mm]	$\psi_{ec2,Np}$	$\psi_{s,Np}$	$\psi_{re,Np}$
2	0.989	4	0.985	0.900	1.000

$N^0_{Rk,p}$ [kN]	$N_{Rk,p}$ [kN]	$\gamma_{M,c,p}$	$V_{Rd,cp}$ [kN]	V_{Sd} [kN]
65.387	88.789	1.500	118.385	12.207

4.3 Concrete edge failure in direction x-

l_f [mm]	d_{nom} [mm]	k_V	α	β
150	16.0	1.700	0.072	0.056

c_1 [mm]	$A_{c,V}$ [mm²]	$A^0_{c,V}$ [mm²]	$\psi_{A,V}$
290	300,000	378,450	0.793

$\psi_{s,V}$	$\psi_{h,V}$	$\psi_{\alpha,V}$	$e_{c,V}$ [mm]	$\psi_{ec,V}$	$\psi_{re,V}$	$\psi_{90°,V}$
1.000	1.204	2.000	0	1.000	1.000	2.000

$V^0_{Rk,c}$ [kN]	n_1	$\gamma_{M,c}$	$V_{Rd,c}$ [kN]	V_{Sd} [kN]
67.845	2	1.500	43.174	3.701

Note: Resistance limit acc. to fib (07/2011) Eq. (10.2-6) is governing

5 Combined tension and shear loads SOFA (fib (07/2011), section 10.3)

	β_N	β_V	α	Utilization $\beta_{N,V}$ [%]	Status
steel	0.240	0.063	2.000	7	OK
concrete	0.835	0.103	1.500	80	OK

$\beta_N^\alpha + \beta_V^\alpha <= 1$

Input data and results must be checked for agreement with the existing conditions and for plausibility!
PROFIS Anchor (c) 2003-2009 Hilti AG, FL-9494 Schaan Hilti is a registered Trademark of Hilti AG, Schaan

6 Displacements (highest loaded anchor)

Short term loading:

N_{Sk}	=	14.900 [kN]	δ_N	=	0.138 [mm]
V_{Sk}	=	2.249 [kN]	δ_V	=	0.090 [mm]
			δ_{NV}	=	0.165 [mm]

Long term loading:

N_{Sk}	=	14.900 [kN]	δ_N	=	0.316 [mm]
V_{Sk}	=	2.249 [kN]	δ_V	=	0.135 [mm]
			δ_{NV}	=	0.344 [mm]

Comments: Tension displacements are valid with half of the required installation torque moment for uncracked concrete! Shear displacements are valid without friction between the concrete and the anchor plate! The gap due to the drilled hole and clearance hole tolerances are not included in this calculation!

The acceptable anchor displacements depend on the fastened construction and must be defined by the designer!

7 Warnings

- The anchor design methods in PROFIS Anchor require rigid anchor plates per current regulations (ETAG 001/Annex C, EOTA TR029, etc.). This means load re-distribution on the anchors due to elastic deformations of the anchor plate are not considered - the anchor plate is assumed to be sufficiently stiff, in order not to be deformed when subjected to the design loading. PROFIS Anchor calculates the minimum required anchor plate thickness with FEM to limit the stress of the anchor plate based on the assumptions explained above. The proof if the rigid anchor plate assumption is valid is not carried out by PROFIS Anchor. Input data and results must be checked for agreement with the existing conditions and for plausibility!
- The accessory list in this report is for the information of the user only. In any case, the instructions for use provided with the product have to be followed to ensure a proper installation.
- Bore hole cleaning must be performed according to instructions for use (blow twice with oil-free compressed air (min. 6 bar), brush twice, blow twice with oil-free compressed air (min. 6 bar)).
- Characteristic bond resistances depend on short- and long-term temperatures.
- Please contact Hilti to check feasibility of HIT-V rod supply.
- The design method fib (07/2011) assumes that no hole clearance between the anchors and the fixture is present. This can be achieved by filling the gap with mortar of sufficient compressive strength (e.g. by using the HILTI Seismic/Filling set) or by other suitable means
- The compliance with current standards (e.g. EC3) is the responsibility of the user
- Checking the transfer of loads into the base material is required in accordance with fib (07/2011)!

Fastening meets the design criteria!

Input data and results must be checked for agreement with the existing conditions and for plausibility!
PROFIS Anchor (c) 2003-2009 Hilti AG, FL-9494 Schaan Hilti is a registered Trademark of Hilti AG, Schaan

8 Installation data

Anchor plate, steel: -
Profile: no profile
Hole diameter in the fixture: d_f = 18 mm
Plate thickness (input): 15 mm
Recommended plate thickness: not calculated
Drilling method: Hammer drilled
Cleaning: Compressed air cleaning of the drilled hole according to instructions for use is required

Anchor type and diameter: HIT-HY 200 + HIT-V (8.8) M16
Installation torque: 0.080 kNm
Hole diameter in the base material: 18 mm
Hole depth in the base material: 150 mm
Minimum thickness of the base material: 186 mm

8.1 Recommended accessories

Drilling	Cleaning	Setting
• Suitable Rotary Hammer • Properly sized drill bit	• Compressed air with required accessories to blow from the bottom of the hole • Proper diameter wire brush	• Dispenser including cassette and mixer • Seismic/Filling set • Torque wrench

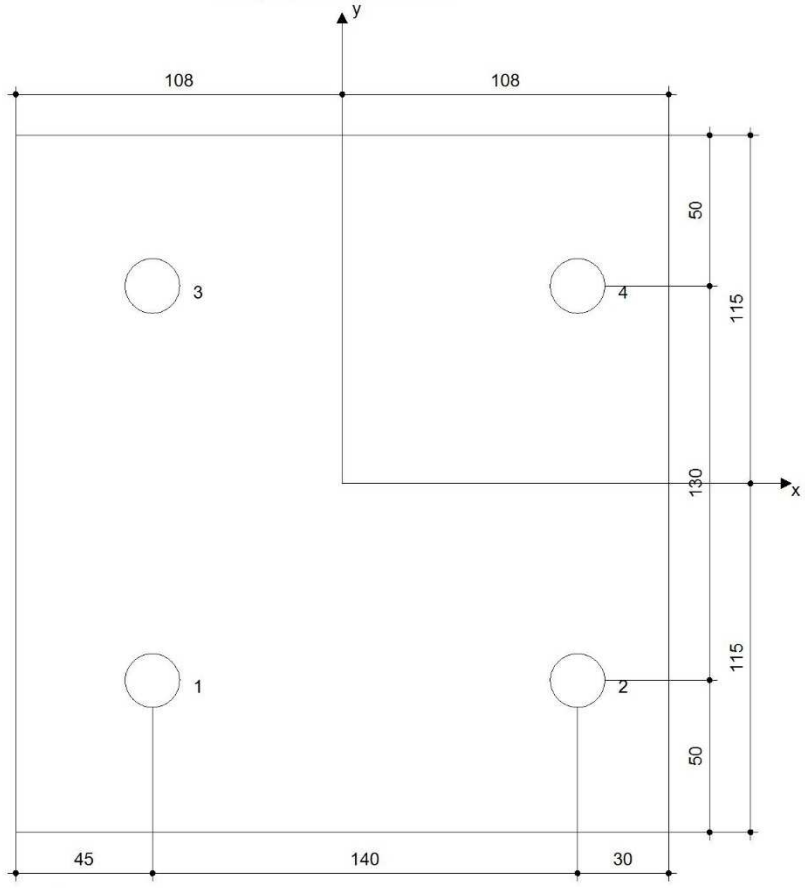

Coordinates Anchor [mm]

Anchor	x	y	c_{-x}	c_{+x}	c_{-y}	c_{+y}
1	-63	-65	150	-	-	-
2	78	-65	290	-	-	-
3	-63	65	150	-	-	-
4	78	65	290	-	-	-

Input data and results must be checked for agreement with the existing conditions and for plausibility!
PROFIS Anchor (c) 2003-2009 Hilti AG, FL-9494 Schaan Hilti is a registered Trademark of Hilti AG, Schaan

9 Remarks; Your Cooperation Duties

- Any and all information and data contained in the Software concern solely the use of Hilti products and are based on the principles, formulas and security regulations in accordance with Hilti's technical directions and operating, mounting and assembly instructions, etc., that must be strictly complied with by the user. All figures contained therein are average figures, and therefore use-specific tests are to be conducted prior to using the relevant Hilti product. The results of the calculations carried out by means of the Software are based essentially on the data you put in. Therefore, you bear the sole responsibility for the absence of errors, the completeness and the relevance of the data to be put in by you. Moreover, you bear sole responsibility for having the results of the calculation checked and cleared by an expert, particularly with regard to compliance with applicable norms and permits, prior to using them for your specific facility. The Software serves only as an aid to interpret norms and permits without any guarantee as to the absence of errors, the correctness and the relevance of the results or suitability for a specific application.
- You must take all necessary and reasonable steps to prevent or limit damage caused by the Software. In particular, you must arrange for the regular backup of programs and data and, if applicable, carry out the updates of the Software offered by Hilti on a regular basis. If you do not use the AutoUpdate function of the Software, you must ensure that you are using the current and thus up-to-date version of the Software in each case by carrying out manual updates via the Hilti Website. Hilti will not be liable for consequences, such as the recovery of lost or damaged data or programs, arising from a culpable breach of duty by you.

Input data and results must be checked for agreement with the existing conditions and for plausibility!
PROFIS Anchor (c) 2003-2009 Hilti AG, FL-9494 Schaan Hilti is a registered Trademark of Hilti AG, Schaan

ΕΔΡΑΣΗ ΔΟΚΟΥ ΗΕΒ180

www.hilti.com

Profis Anchor 2.8.5

Company:		Page:	1
Specifier:		Project:	
Address:		Sub-Project I Pos. No.:	
Phone I Fax:	|	Date:	18/11/2019
E-Mail:			

Specifier's comments:

1 Input data



Anchor type and diameter:	**HIT-HY 200 + HIT-V (8.8) M16**
Seismic/Filling set or any suitable annular gap filling solution	
Effective embedment depth:	$h_{ef,act}$ = 150 mm ($h_{ef,limit}$ = - mm)
Material:	8.8
Evaluation Service Report:	ETA 11/0493
Issued I Valid:	8/7/2019 | -
Proof:	SOFA design method + fib (07/2011) - after ETAG BOND testing
Stand-off installation:	e_b = 0 mm (no stand-off); t = 15 mm
Anchor plate:	l_x x l_y x t = 315 mm x 240 mm x 15 mm; (Recommended plate thickness: not calculated
Profile:	no profile
Base material:	cracked concrete, C25/30, $f_{c,cyl}$ = 25.00 N/mm^2; h = 300 mm, Temp. short/long: 40/24 °C
Installation:	**hammer drilled hole, Installation condition: Dry**
Reinforcement:	no reinforcement or reinforcement spacing >= 150 mm (any Ø) or >= 100 mm (Ø <= 10 mm) no longitudinal edge reinforcement Reinforcement to control splitting according to fib (07/2011), 16.1.5 present

R - The anchor calculation is based on a rigid anchor plate assumption.

Geometry [mm] & Loading [kN, kNm]

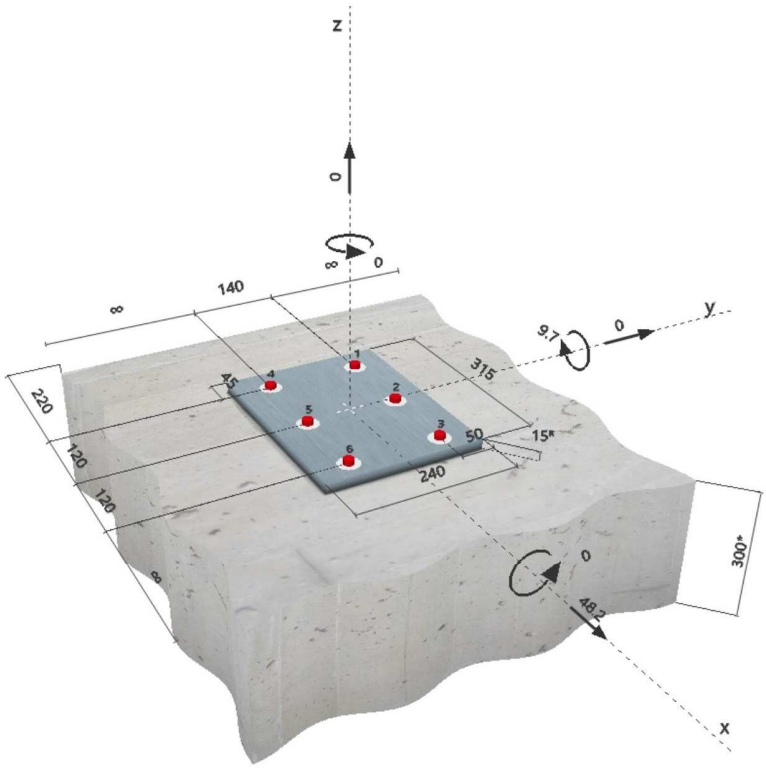

Input data and results must be checked for agreement with the existing conditions and for plausibility!
PROFIS Anchor (c) 2003-2009 Hilti AG, FL-9494 Schaan Hilti is a registered Trademark of Hilti AG, Schaan

2 Load case/Resulting anchor forces

Load case: Design loads

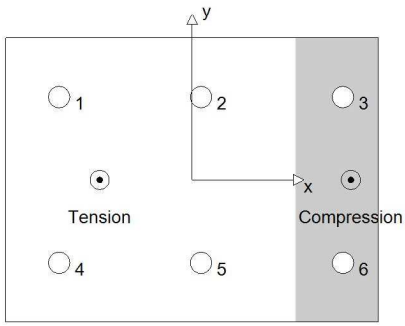

Anchor reactions [kN]
Tension force: (+Tension, -Compression)

Anchor	Tension force	Shear force	Shear force x	Shear force y
1	16.307	8.033	8.033	0.000
2	6.528	8.033	8.033	0.000
3	0.000	8.033	8.033	0.000
4	16.307	8.033	8.033	0.000
5	6.528	8.033	8.033	0.000
6	0.000	8.033	8.033	0.000

max. concrete compressive strain: 0.18 [‰]
max. concrete compressive stress: 5.44 [N/mm²]
resulting tension force in (x/y)=(-78/0): 45.670 [kN]
resulting compression force in (x/y)=(134/0): 45.670 [kN]

Anchor forces are calculated based on the assumption of a rigid anchor plate.

3 Tension load SOFA (fib (07/2011), section 16.2.1)

	Load [kN]	Capacity [kN]	Utilization β_N [%]	Status
Steel Strength*	16.307	83.733	20	OK
Combined pullout-concrete cone failure**	45.670	67.262	68	OK
Concrete Breakout Strength**	45.670	69.201	66	OK
Splitting failure**	N/A	N/A	N/A	N/A

* anchor having the highest loading **anchor group (anchors in tension)

3.1 Steel Strength

$N_{Rk,s}$ [kN]	$\gamma_{M,s}$	$N_{Rd,s}$ [kN]	N_{Sd} [kN]
125.600	1.500	83.733	16.307

3.2 Combined pullout-concrete cone failure

$A_{p,N}$ [mm²]	$A^0_{p,N}$ [mm²]	$\psi_{A,Np}$	$\tau_{Rk,ucr,25}$ [N/mm²]	$s_{cr,Np}$ [mm]	$c_{cr,Np}$ [mm]	c_{min} [mm]
333,350	202,500	1.646	18.00	450	225	220

ψ_c	$\tau_{Rk,cr}$ [N/mm²]	max $\tau_{Rk,cr}$ [N/mm²]	$\psi^0_{g,Np}$	$\psi_{g,Np}$
1.020	8.67	9.38	1.111	1.051

$e_{c1,N}$ [mm]	$\psi_{ec1,Np}$	$e_{c2,N}$ [mm]	$\psi_{ec2,Np}$	$\psi_{s,Np}$	$\psi_{re,Np}$
26	0.897	0	1.000	0.993	1.000

$N^0_{Rk,p}$ [kN]	$N_{Rk,p}$ [kN]	$\gamma_{M,p}$	$N_{Rd,p}$ [kN]	N_{Sd} [kN]
65.387	100.893	1.500	67.262	45.670

3.3 Concrete Breakout Strength

$A_{c,N}$ [mm²]	$A^0_{c,N}$ [mm²]	$\psi_{A,N}$	$c_{cr,N}$ [mm]	$s_{cr,N}$ [mm]
333,350	202,500	1.646	225	450

$e_{c1,N}$ [mm]	$\psi_{ec1,N}$	$e_{c2,N}$ [mm]	$\psi_{ec2,N}$	$\psi_{s,N}$	$\psi_{re,N}$
26	0.897	0	1.000	0.993	1.000

k_1	$N^0_{Rk,c}$ [kN]	$\gamma_{M,c}$	$N_{Rd,c}$ [kN]	N_{Sd} [kN]
7.700	70.729	1.500	69.201	45.670

Input data and results must be checked for agreement with the existing conditions and for plausibility!
PROFIS Anchor (c) 2003-2009 Hilti AG, FL-9494 Schaan Hilti is a registered Trademark of Hilti AG, Schaan

Company: Page: 3
Specifier: Project:
Address: Sub-Project I Pos. No.:
Phone I Fax: | Date: 18/11/2019
E-Mail:

4 Shear load SOFA (fib (07/2011), section 16.2.2)

	Load [kN]	Capacity [kN]	Utilization β_V [%]	Status
Steel Strength (without lever arm)*	8.033	50.240	16	OK
Steel failure (with lever arm)*	N/A	N/A	N/A	N/A
Pryout Strength**	48.200	185.716	26	OK
Concrete edge failure in direction **	N/A	N/A	N/A	N/A

* anchor having the highest loading **anchor group (relevant anchors)

4.1 Steel Strength (without lever arm)

$V_{Rk,s}$ [kN]	$\gamma_{M,s}$	$V_{Rd,s}$ [kN]	V_{Sd} [kN]
62.800	1.250	50.240	8.033

4.2 Pryout Strength (Bond Strength controls)

$A_{p,N}$ [mm²]	$A^0_{p,N}$ [mm²]	$\psi_{A,Np}$	$\tau_{Rk,ucr,25}$ [N/mm²]	$c_{cr,Np}$ [mm]	$s_{cr,Np}$ [mm]	c_{min} [mm]
404,150	202,500	1.996	18.00	225	450	220

ψ_c	$\tau_{Rk,cr}$ [N/mm²]	max $\tau_{Rk,cr}$ [N/mm²]	k_4	$\psi^0_{g,Np}$	$\psi_{g,Np}$
1.020	8.67	9.38	2.000	1.161	1.075

$e_{c1,V}$ [mm]	$\psi_{ec1,Np}$	$e_{c2,V}$ [mm]	$\psi_{ec2,Np}$	$\psi_{s,Np}$	$\psi_{re,Np}$
0	1.000	0	1.000	0.993	1.000

$N^0_{Rk,p}$ [kN]	$N_{Rk,p}$ [kN]	$\gamma_{M,c,p}$	$V_{Rd,cp}$ [kN]	V_{Sd} [kN]
65.387	139.287	1.500	185.716	48.200

5 Combined tension and shear loads SOFA (fib (07/2011), section 10.3)

	β_N	β_V	α	Utilization $\beta_{N,V}$ [%]	Status
steel	0.195	0.160	2.000	7	OK
concrete	0.679	0.260	1.500	70	OK

$\beta_N^\alpha + \beta_V^\alpha <= 1$

6 Displacements (highest loaded anchor)

Short term loading:

N_{Sk} = 12.080 [kN] δ_N = 0.112 [mm]
V_{Sk} = 5.951 [kN] δ_V = 0.238 [mm]
δ_{NV} = 0.263 [mm]

Long term loading:

N_{Sk} = 12.080 [kN] δ_N = 0.256 [mm]
V_{Sk} = 5.951 [kN] δ_V = 0.357 [mm]
δ_{NV} = 0.440 [mm]

Comments: Tension displacements are valid with half of the required installation torque moment for uncracked concrete! Shear displacements are valid without friction between the concrete and the anchor plate! The gap due to the drilled hole and clearance hole tolerances are not included in this calculation!

The acceptable anchor displacements depend on the fastened construction and must be defined by the designer!

Input data and results must be checked for agreement with the existing conditions and for plausibility!
PROFIS Anchor (c) 2003-2009 Hilti AG, FL-9494 Schaan Hilti is a registered Trademark of Hilti AG, Schaan

7 Warnings

- The anchor design methods in PROFIS Anchor require rigid anchor plates per current regulations (ETAG 001/Annex C, EOTA TR029, etc.). This means load re-distribution on the anchors due to elastic deformations of the anchor plate are not considered - the anchor plate is assumed to be sufficiently stiff, in order not to be deformed when subjected to the design loading. PROFIS Anchor calculates the minimum required anchor plate thickness with FEM to limit the stress of the anchor plate based on the assumptions explained above. The proof if the rigid anchor plate assumption is valid is not carried out by PROFIS Anchor. Input data and results must be checked for agreement with the existing conditions and for plausibility!
- The accessory list in this report is for the information of the user only. In any case, the instructions for use provided with the product have to be followed to ensure a proper installation.
- Bore hole cleaning must be performed according to instructions for use (blow twice with oil-free compressed air (min. 6 bar), brush twice, blow twice with oil-free compressed air (min. 6 bar)).
- Characteristic bond resistances depend on short- and long-term temperatures.
- Please contact Hilti to check feasibility of HIT-V rod supply.
- The design method fib (07/2011) assumes that no hole clearance between the anchors and the fixture is present. This can be achieved by filling the gap with mortar of sufficient compressive strength (e.g. by using the HILTI Seismic/Filling set) or by other suitable means
- The compliance with current standards (e.g. EC3) is the responsibility of the user
- Checking the transfer of loads into the base material is required in accordance with fib (07/2011)!

Fastening meets the design criteria!

Input data and results must be checked for agreement with the existing conditions and for plausibility!
PROFIS Anchor (c) 2003-2009 Hilti AG, FL-9494 Schaan Hilti is a registered Trademark of Hilti AG, Schaan

8 Installation data

Anchor plate, steel: -
Profile: no profile
Hole diameter in the fixture: d_f = 18 mm
Plate thickness (input): 15 mm
Recommended plate thickness: not calculated
Drilling method: Hammer drilled
Cleaning: Compressed air cleaning of the drilled hole according to instructions for use is required

Anchor type and diameter: HIT-HY 200 + HIT-V (8.8) M16
Installation torque: 0.080 kNm
Hole diameter in the base material: 18 mm
Hole depth in the base material: 150 mm
Minimum thickness of the base material: 186 mm

8.1 Recommended accessories

Drilling	Cleaning	Setting
• Suitable Rotary Hammer • Properly sized drill bit	• Compressed air with required accessories to blow from the bottom of the hole • Proper diameter wire brush	• Dispenser including cassette and mixer • Seismic/Filling set • Torque wrench

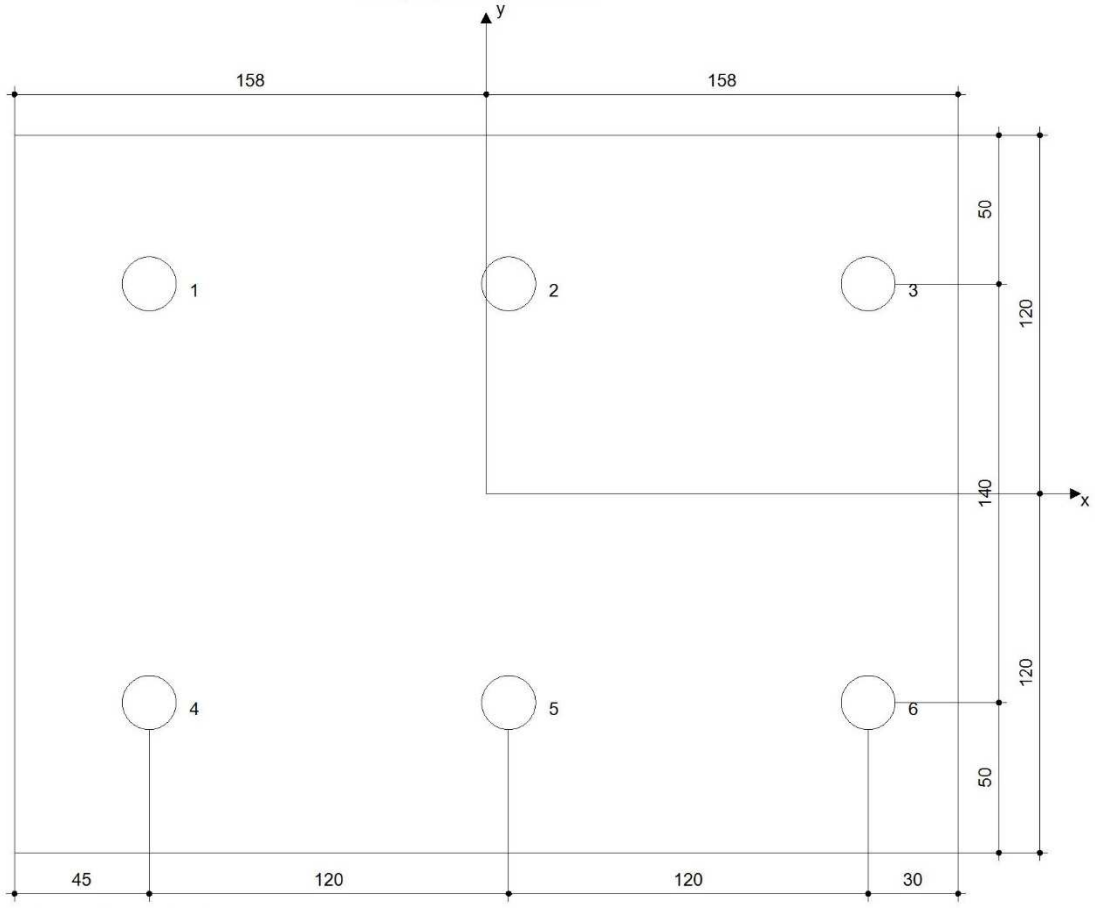

Coordinates Anchor [mm]

Anchor	x	y	c_{-x}	c_{+x}	c_{-y}	c_{+y}
1	-113	70	220	-	-	-
2	8	70	340	-	-	-
3	128	70	460	-	-	-

Anchor	x	y	c_{-x}	c_{+x}	c_{-y}	c_{+y}
4	-113	-70	220	-	-	-
5	8	-70	340	-	-	-
6	128	-70	460	-	-	-

Input data and results must be checked for agreement with the existing conditions and for plausibility!
PROFIS Anchor (c) 2003-2009 Hilti AG, FL-9494 Schaan Hilti is a registered Trademark of Hilti AG, Schaan

9 Remarks; Your Cooperation Duties

- Any and all information and data contained in the Software concern solely the use of Hilti products and are based on the principles, formulas and security regulations in accordance with Hilti's technical directions and operating, mounting and assembly instructions, etc., that must be strictly complied with by the user. All figures contained therein are average figures, and therefore use-specific tests are to be conducted prior to using the relevant Hilti product. The results of the calculations carried out by means of the Software are based essentially on the data you put in. Therefore, you bear the sole responsibility for the absence of errors, the completeness and the relevance of the data to be put in by you. Moreover, you bear sole responsibility for having the results of the calculation checked and cleared by an expert, particularly with regard to compliance with applicable norms and permits, prior to using them for your specific facility. The Software serves only as an aid to interpret norms and permits without any guarantee as to the absence of errors, the correctness and the relevance of the results or suitability for a specific application.
- You must take all necessary and reasonable steps to prevent or limit damage caused by the Software. In particular, you must arrange for the regular backup of programs and data and, if applicable, carry out the updates of the Software offered by Hilti on a regular basis. If you do not use the AutoUpdate function of the Software, you must ensure that you are using the current and thus up-to-date version of the Software in each case by carrying out manual updates via the Hilti Website. Hilti will not be liable for consequences, such as the recovery of lost or damaged data or programs, arising from a culpable breach of duty by you.

Input data and results must be checked for agreement with the existing conditions and for plausibility!
PROFIS Anchor (c) 2003-2009 Hilti AG, FL-9494 Schaan Hilti is a registered Trademark of Hilti AG, Schaan

ΑΡΤΕΜΙΣ ΣΥΜΒΟΥΛΟΙ ΜΗΧΑΝΙΚΟΙ ΕΠΕ
ΕΤΑΙΡΕΙΑ ΣΤΑΤΙΚΩΝ ΜΕΛΕΤΩΝ
ΛΟΥΚΑΡΕΩΣ 57-59 114 75 ΑΘΗΝΑ
ΤΗΛ.: 210 6450349, ΦΑΞ: 210 6450745
ΑΦΜ: 099841348, ΔΟΥ: ΙΣ' ΑΘΗΝΩΝ